HEVAC Control Agencies

ENDEAVOUR V3.3 USER MANUAL

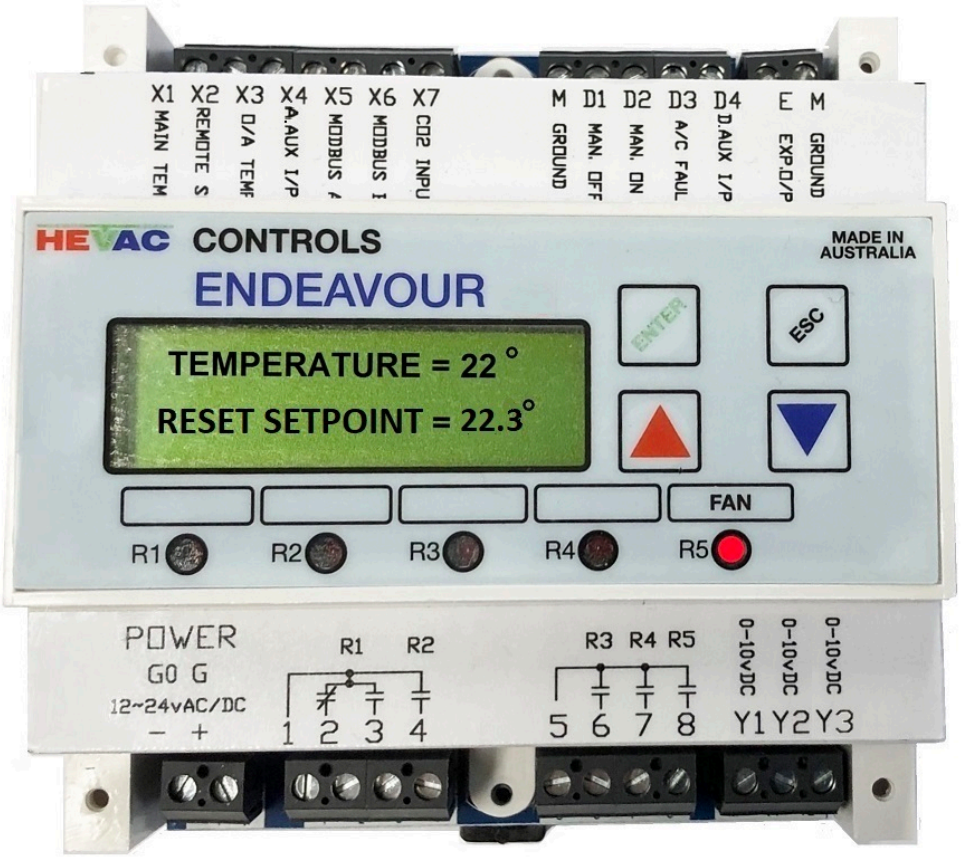

** INTERNET READY VIA GATEWAY MODULE OR CONNECT TO LOCAL HMI COLOUR TOUCH SCREEN*

** SELECTABLE PRE-LOADED PROGRAMS..1H/1C, 2H/2C, COMP./RVH, H+C FCU CONTROL ETC.*

** PASSIVE or SCALABLE ACTIVE 0-10vdc or 4-20mA SENSOR inputs*

** DEDICATED CO2 CONTROL & ECON.CYCLE OVERRIDE CAPABILITY*

** NIGHT PURGE OPERATION FOR LOW COST O/A PRE- COOLING WHEN CONDITIONS SUIT*

** EXTERNAL A/C FAULT (D3) & STATUS INPUT D4 INPUTS FOR MONITORING*

** AIR-ON MEASURED TEMPERATURE LIMITATION OF FRESH AIR MODE ECONOMY CYCLE*

** UNIVERSAL ANALOGUE INPUT (X4) FOR EXTRA 2nd or INDEPENDANT CONTROL LOOP*

** CONTROLLER SETPOINT RESET by OUTSIDE AIR TEMP. & ROOM HUMIDITY SENSORS*

** CAN BE SET TO TIME SWITCH (NO TEMPERATURE CONTROL) or X4 CONTROL ONLY MODE*

** LOCKABLE 3 LEVEL MENU & SETPOINT ACCESS*

** SERVICE FEATURE TO TEMPORARILY RECLAIM SETPOINT FROM REMOTE SETPOINT DEVICE*

** INPUT CAPABILITY FOR MOVEMENT SENSOR TO TRIGGER RUN TIMER*

** AUTO / OFF / ON SYSTEM OVERRIDE SWITCH INPUTS*

** EVENT DATA LOGGER*

** INDEPENDENT AUXILIARY 2nd TIME SWITCH for lights or other amenities.*

** ADDITIONAL 0-10vDC ANALOGUE OUTPUT "Y3"*

** DEDICATED RELAY OUTPUT FOR AHR RUN INDICATION*

INDEX

	PAGE
BASIC OVERVIEW, OVERRIDES & I/O USAGE.....	3
TECHNICAL NOTES & INPUT TERMINAL DESCRIPTION & USE.....	4, 5
USER INTERFACE & KEYBOARD LOCK LEVELS.....	6
MENU DESCRIPTION	7
EVENT HISTORY DATA LOGGER	8
SET (A/C SYSTEM) **"START BY"** METHOD.....	*8*
CLOCK SETUP - TIME, DATE & DAYLIGHT SAVING ENABLE.....	9
MAIN **TIME SWITCH** (1)	10
AUXILLARY TIME SWITCH (2)	11
RUN / AHR TIMER	12
HOLIDAY OFF OVERRIDE.....	12
NIGHT PURGE VENTILATION SETUP.....	13
LCD SCREEN MODE.....	14
CONTROLLER MAIN FUNCTION- TEMP CONTROL, TIME SW.ONLY or X4 ONLY...	14
PRESET *USER SELETABLE PROGRAMS*.....	*15-18*
RELAY 1-4 ASSIGNMENT & PARAMETER PROGRAMMING.....	19,20
FAN CONTROL METHOD (CONTINUOUS OR CYCLE) (RELAY 5).....	21
Y1 & Y2 ANALOGUE OUTPUT PROGRAMMING.....	21,22
X1-X7 SENSOR INPUTS, PASSIVE OR ACTIVE HARDWARE SETTINGS.....	23
X1 MAIN TEMP. SENSOR CONFIGURATION.....	23
X2 REMOTE SET POINT CONFIGURATION.....	24
X3 OUTSIDE AIR TEMP. SENSOR CONFIGURATION & O/A SETPOINT RESET.....	24,25
X4 UNIVERSAL ANALOGUE I/P for Monitoring, Control & Humid S/P RESET.....	26
O/A TEMP. & ROOM HUMIDITY RESET OF CONTROLLER SETPOINT (GRAPH)...	27
X7 CO2 SENSOR ENABLE & Y1 ECON.CYCLE OVERRIDE SETTINGS.....	28
MODBUS SETUP	29
TIPS & TRICKS.....	30
FACTORY RESET DEFAULTS.....	30
WIRING & CONNECTION DETAILS.....	31-33
USER PROGRAM INFORMATION FORMS.....	34-36

OVERVIEW

- The Hevac ENDEAVOUR is a fully programmable microprocessor based Universal controller with 5 analogue & 4 digital inputs + 5 relay & 3 analogue (0-10vDC) outputs. Run (start) operation can be triggered via an internal 365 day Time Switch, Run Timer & or external Auto/Off/Manual connected switches. Modbus capability also allows the controller (or controllers) to be connected to a local HMI colour touch screen or (coming soon) to the Internet via a gateway module for remote monitoring & override. A 2nd independent time switch is also included for auxiliary independent time switch requirements. Special Input X4 allows the Endeavour to be used as a general purpose **Universal Controller** measuring & controlling some medium other & or temperature allowing the Endeavour to control 2 independant control loops, making this version extremely powerful & flexible. The controllers I/O are displayed via a scrolling backlit LCD screen giving plain English status together with 5 dedicated LED's showing the relays on/off state (which can be labeled on the face plate with a marker). Typically used for Air Conditioning control applications where On/Off control of Heating & Cooling stages and /or modulating control of actuators / devices requiring a variable 0-10vdc control signal is required. The Endeavour can also be set to "Time Switch only" mode with all other non timer capabilities disabled allowing this controller to be used as a 2 channel 365 day Time Switch only. The 4 programmable relays & the 3 analogue output "use" (modes) can be primarily set as : Heat, Cool or Both (both means the output operates as both a heating and a cooling output) or alternatively can be set to respond to an external rising or falling scalable universal input signal (0-10v or 4-20mA) on terminal X4. The relays can also be tied to respond to the rising or falling of the Y1 or Y2 analogue outputs, plus new to this version a relay can be set to enenergise when the the system is running in After Hours Run mode, typically used to operate a AHR indication lamp. The 5th relay is dedicated as a System Run (Fan / Main Time Switch) relay which can be set to operate continuously whilst the controller is enabled or to cycle on & off with a heat or cool run call (typical for domestic A/C systems). The 3 analogue outputs can be set to P or P+I mode (proportional+ integral action) and the minimum & maximum signal levels can be range limited, any minimum value setting is automatically overridden to zero when the system is off which is perfect for EC fan time switch control when a minimum speed requirement is needed when triggered to start.
  The main temperature setpoint can be shifted (reset) due to outside temperature & room humidity levels. O/A temperature particularly influences how we dress & together with room humidity affects our perception of environmental comfort, shifting the operating setpoint (following outside air temperature) also substantially saves energy operating costs.

OPTIONAL REMOTE INTERLOCKS & OVERRIDES

- Remote System AUTO / OFF & AHR operation can be easily added by simply connecting a normally open (N/O) switch anywhere convenient in parallel with the main (passive) thermistor temperature sensor wires X1 & M. Momentarily shorting X1 & M results in triggering a run timer function (typically as an after hours timer function) or / & constant shorting of X1 & M for more then 2 seconds results in a system OFF function. Manual override functions are also available at the controller terminals "D1,D2 & M" for Auto/Off/On & AHR operation. From version v2.26+ input D2 can be connected to a movement sensor to trigger the Endeavours adjustable run timer.

- For auxiliary control interlocks, spare relays or analogue outputs can be controlled by an independent passive Hevac temperature sensor (-D type) or by any type of 0-10vDC or 4-20mA input (scalable) from terminal **X4** with a programmable appropriate designator ie **C, %, pa, ppm, CO2, Volt.** Using both inputs X1 & X4 the Endeavour is now affectively 2 independent controllers in one, making the Endeavour a powerful dual loop Universal controller.This X4 input can also be used for air-on temperature limitation overriding the output to economy cycle dampers if connected.

- The controller has **Modbus** communications capability for connection of up to 32 controllers to our colour HMI wall (or switchboard door) display panel for zone status, individual setpoint adjustment & system Auto/Off/On override. Alternatively upto 247 controllers can be connected to a 3rd party BMS system for remote control & monitoring.
  A BMS can also monitor 2 dedicated digital inputs, "D3" is a A/C fault input & "D4" is a general purpose on/off status input that could be used for example to monitor & prove supply air fan running operation via a mechanical pressure switch. In the near future this controller can be monitored / overridden via a gateway module connected to the Internet.

- With an optional **O/A sensor** connected, the Economy cycle damper operation (Y1 output) for temperature control can be interlocked for free heating, cooling or both when the outside air temperature conditions are favorable. The use of outside air for temperature control can also be inhibited if the outside air temperature falls below an adjustable minimum O/A temperature (factory set at 12c for DX or FCU coil protection).This O/A temperature input can now also be used to automatically reset the controllers operating setpoint in relation to the outdoor temperature for energy saving & greater comfort control. Input X4 can also reset the controllers setpoint due to measured room or O/A humidity, New to this version the X4 input can used to limit fresh air use by monitoring the air-on temperature.

- With an optional **CO2 sensor** connected, economy cycle dampers can also be overriden & proportionally driven to the fresh air mode to reduce high CO2 levels. The maximum damper output signal for CO2 control can be restricted in extreme O/A temperatures so as not to lose temperature control, all settings are user adjustable. The CO2 input can now also control spare relays for on/off CO2 control.

- **Remote Set Point** devices (either passive or active) can be connected to the controller. If a passive adjuster is connected (default setting), the controller will automatically detect and hand over set point adjustment authority to the remote device (then ignoring the controllers UP & DOWN buttons). The remote set point adjustment can be built into a room temperature sensor (SRT-DSP or HSMO-DAT) or as a separate stand alone device giving remote setpoint control only (SPA-D). The range of the passive remote setpoint (0-10k) is fixed at 18 to 25 degrees or if an active remote setpoint is used (0 to 10v) the 0-10vDC is adjustable for a range of 0-100c.
  As a service aid any remote setpoint device can be temporarily virtually disconnected by holding the UP & DOWN buttons together for 5 seconds which hands conventional setpoint control back to the controller to aid in commissioning & testing & will automatically return to remote control after 10 minutes or can be cancelled anytime by again pushing the UP & DOWN buttons together.

General Specifications

Operating Voltage	12 to 24 Volts AC or DC
Power Consumption	
At 24vDC Volts	MAX. 150mA
At 24vAC Volts	4 VA
Switching Capacity of Relays	
Voltage	AC 1….250 Volts
Current	8.0 (2.5) Amps
Set point Setting Range	3-99 oC in 0.1 oC Increments
Relay Switch ON Points (Dead band)	0.1-19.9 oC
Relay Hysteresis (Switching Differential)	0.1-9.9 oC
Relay to Energise Time Delay	0.1-42 Minutes
Y1/Y2/Y3 Output Voltage Range	0-10VDC
(*NOTE MINIMUM & MAXIMUM Y OUTPUT VOLTAGE USER ADJUSTABLE*)	
Y1/Y2/Y3 Start Point (Dead band)	0-19.9 oC
Y1/Y2/Y3 Range (Proportional Band)	0.5-25 oC
Y1/Y2/Y3 Integral action (P+I triggers >10% P output)	Off-60 minutes

ANALOGUE INPUTS

X1 : Main Temperature Sensor Input configurable (with jumper & software) as an Active (0-10vdc or 4-20mA ~0 to 100c (adjustable) or Passive (4.2k@22c).

X2 : Remote Set point configurable (with jumper & software) as passive using 10K potentiometer (18-25c Range) or 0.6-10vdc (top end range configurable).

X3 : Outside temperature sensor configurable (with jumper & software) as Active (0-10vor 4-20mA ~0-100c) or Passive (4.2k@22c). Optional use for O/A S/P reset.

X4 : Powerful Universal input configurable (with jumper & software) for use as just an auxiliary sensor monitoring input, or as an auxiliary independant control loop to control spare relays or analogue outputs. Also suitable as a humidity measurement input for controlled outputs or for induced humidity based reset of the controllers operating temperature setpoint. And new to this version, X4 can now be used for AIR-ON temperature limitation if modulating economy cycle dampers are used for free cooling using an air-on duct sensor to limit F/A if DX cooling also required to run.

X7 : Room or R/A Duct CO2 Sensor input to override economy cycle operation or used to control spare internal relays (R1-4) for on/off CO2 control interlocks

DIGITAL INPUTS

D1 : FORCED SYSTEM OFF OVERRIDE INPUT (when connected to ground)

D2 : FORED SYSTEM ON OVERRIDE INPUT (when connected to ground)

D3 : EXTERNAL FAULT INPUT to generate " EXTERNAL FAULT" message on controller, HMI panel or to 3rd party BMS via Modbus connection.

D4 :MONITOR INPUT FOR BMS USE from external on/off input ,,ie pressure switch

Communication : Terminal's X5 & X6 configurable for RS485 MODBUS communication. X7 can be set to ground (via an internal 100 ohm resistor) for use as a comms shield connection if not used as a CO2 sensor connection.

Output Indication:	Relay On/Off Status	5 x Red LED
	LCD Display	2 x 16 character LCD
	Display Resolution	0.1 Increments

Technical Data (Cont.)

Environmental Conditions	Operation	
	Ambient Temperature	0...45oC
	Humidity	< 85 % RH (Non Condensing)
	Storage and Transport	
	Ambient Temperature	-5...65oC
	Humidity	< 90 % RH (Non Condensing)
Product Standards	COMPLIES TO ALL RELEVENT AUSTRALIAN STANDARDS including 6mm segregation between high & low voltage connections	
Weight	Including Packaging	600 grams
Housing	Colour	Grey
	Material	ABS POLYCARB
	UV Stabilised	YES
	Fire Retardant	YES
	Size	L105mm x W105mm x D60mm
	Mounting Method	35mm Din Rail Mountable

Terminal Designations

X1 Main Temperature Sensor Input (Passive or Active)

X2 Remote S/P input (Passive or Active)

X3 O/A sensor input (Passive or Active)

X4 Auxiliary analogue input (Passive or Active)

X5 MODBUS RS485 - A Terminal

X6 MODBUS RS485 - B Terminal

X7 CO2 sensor (default) or MODBUS SHIELD (GND)

M Common sensor & signal ground

D1 Manual System OFF

D2 Manual System ON &/or AHR trigger input

D3 External FAULT I/P (for indication)

D4 External On/Off status I/P for BMS monitoring

E & M future Expansion module local comms.

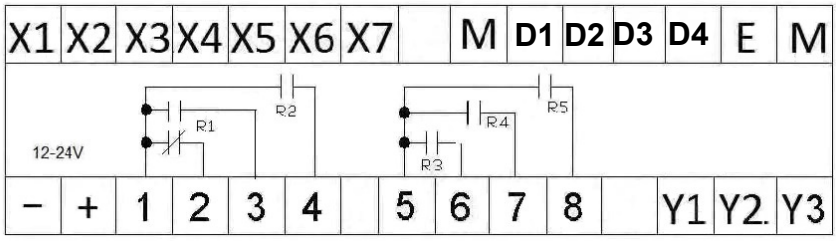

- 12-24 Volt Supply Neutral (internally connected to terminals M)

+ 12-24 Volt AC or DC Supply Active

1 Relay 1 & 2 Common

2 Relay 1 Normally Closed

3 Relay 1 Normally Open

4 Relay 2 Normally Open

5 Relay 3,4 & 5 Common

6 Relay 3 Normally Open

7 Relay 4 Normally Open

8 Relay 5 Normally Open FAN / T.SW.1

Y1 Analog Modulating Output 0-10vDC

Y2 Analog Modulating Output 0-10vDC

Y3 Analog Modulating Output 0-10vDC

USER INTERFACE

The controllers face plate has four push buttons to access & edit controller settings.

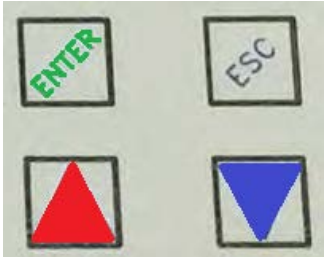

"**ENTER**" ACTS AS THE SAVE OR MENU OPEN BUTTON

"**ESC**" ACTS AS THE EXIT OR JUMP BACK TO PREVIOUS MENU BUTTON

"**UP** & "**DOWN**" BUTTONS ADJUST SETPOINT, SCROLL MENUS & TO EDIT VALUES.

The controller has a backlit (16x2) LCD screen & 5 red LED's to give controller input & output status. The LCD screen will automatically cycle through relevant screens displaying applicable information as per the users programmed use of the controller. The screen can alternatively be set to not scroll and manually moved to next display by pressing the escape button.

To access the menu list as shown on page 7, press the ENTER button & use the UP & DOWN arrow buttons to scroll through the menus, pressing ENTER to open a particular menu to edit. The relay assignments are user programmable using one of the 11 preset programs or can be manually set, and as such the relay "use identifier" text box above each LED is not factory marked and is for optional labeling by the commissioning technician. A forced controller reset will load test program #0, but ex Hevac (unless otherwise arranged) default settings for these relays are set using preset program # 8 assigned as :

R1 Not Used, R2=COMP2, R3=COMP1, R4=R/V HEAT, R5=FAN,

The keyboard can be set in three **lock levels**, level 0 is unlocked, level 1 allows setpoint adjustment only, level 2 allows no adjustment. To access the lock levels press & hold all four button for 5 seconds & release to display the existing level, adjust using the UP or DOWN arrow buttons and press the ENTER button to set & return to the running screen.

The LCD screens will automatically cycle through each relevant display unless the display is set to not scroll.

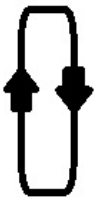

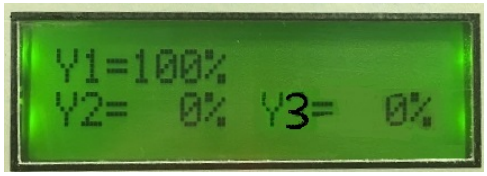

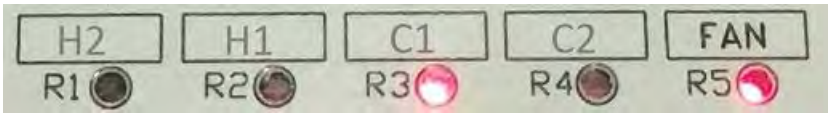

** example of optional identification of output relays by installation contractor*

PROGRAM MENUS

MENU	FUNCTION
VIEW EVENT HISTORY :	*SEQUENTIAL TIME STAMPED LIST OF RELAY ON/OFF EVENTS (HISTORY)*
Set "START BY METHOD" :	*SET SYSTEM ON/OFF OPERATION "BY" the internal **TIMESWITCH** (1), Internal **RUN TIMER** (Triggered by remote push button) or by a remote **MANUAL** ON / OFF SYSTEM SWITCH (by shorting out sensor X1 & M wires or D1 & M terminals).*
Set CLOCK :	*TO SET THE CONTROLLERS TIME, DATE AND ENABLE DAY LIGHT SAVING*
SET MAIN TIME SWITCH (1) :	*PROGRAM MAIN (SYSTEM) TIME SWITCH (1) DAYS & ON OFF TIMES .*
SET AUX. TIME SWITCH (2) :	*PROGRAM AUXILIARY INDEPENDENT 7 DAY TIME SWITCH (2) ON & OFF TIMES.*
SET RUN / AHR TIMER PERIOD :	*SET RUN TIMER DURATION FOR USE AS AN AFTER HOURS RUN TIMER OR AS A SYSTEM RUN (FOR) TIMER (with or without use of the main time switch).*
SET HOLIDAYS :	*PROGRAM INDIVIDULE OR GROUP HOLIDAYS SYSTEM OFF OVERRIDE DATES.*
NIGHT PURGE :	ENABLE & CONFIGURE TIME AND TEMP. CONDITIONS FOR NIGHT VENT MODE
SCREEN DISPLAY :	SET LCD SCREEN TO AUTO SCROLL OR MANUAL DISPLAY CHANGE
CONTROLLER FUNCTION :	SET MAIN CONTROLLER FUNCTION AS : TEMPERATURE / T.SW. CONTROLLER, X4 ONLY CONTROL (ie pressure controller) or TIME SWITCH ONLY MODE
PRESET PROGRAMS :	SELECTABLE PRESET CONFIGURED OUTPUTS TO SUIT DIFFERENT A/C UNITS & FCU's
R1-4 RELAY PROGRAMMING :	*MANUAL EDITING OF MODE & SETTINGS FOR THE 4 PROGRAMMABLE RELAYS (R1-4).*
R5 FAN CONTROL METHOD :	*PROGRAM R5 (FAN) TO CYCLE WITH HEAT / COOL CALL OR CONTINUOUS.*
Y1-Y3 ANALOGUE PROGRAMMING :	*MANUAL EDITING OF MODE & SETTINGS FOR THE 3 ANALOGUE OUTPUTS*
X1 SENSOR CONFIGURATION :	*SET MAIN CONTROL SENSOR (WHICH RELATES TO THE CONTROLLERS SETPOINT)*
X2 REMOTE S/P CONFIGURATION :	*SET TYPE OF OPTIONALLY CONNECTED REMOTE SETPOINT AS PASSIVE 0-10K (FIXED RANGE OF 18-25C) or 0.6-10VDC (MAX RANGE ADJUSTABLE).*
X3 O/AIR TEMP. SENSOR CONFIG. :	*ENABLE & ADJUST SETTINGS FOR O/A TEMPERATURE SENSOR & ITS AFFECTS INCLUDING OUTSIDE TEMP, TO CONTROLLER SETPOINT RESET CONFIG.*
X4 AUXILIARY INPUT CONFIG :	ENABLE MONITORING & / or CONTROL OF AN AUXILIARY ANALOGUE INPUT ie S/A TEMPERATURE, ROOM HUMIDITY or AIR-ON LIMITATION. (IF SET TO HUMIDITY CAN BE ALSO BE USED TO RESET CONTROLLERS OPERATING TEMPERATURE SETPOINT).
X7 CO2 SENSOR CONFIGURATION :	ENABLE & ADJUST SETTINGS FOR A ROOM or (R/A DUCT) CO2 SENSOR
MODBUS SETUP :	ENABLE MODBUS & SET BAUD RATE & ADDRESS SETTINGS
RESTORE FACTORY DEFAULTS :	CLEARS & RESETS ALL SETTINGS BACK TO FACTORY DEFAULTS
EXIT MENU :	EXIT THIS MENU LIST AND RETURN TO OPERATING SCREENS

VIEW EVENT HISTORY (DATA LOGGER)

The ENDEAVOUR incorporates a basic event data logger that records the last 250 "ON" switching events.

example 01 : RELAY 3 ON 15/10/2019 16:30
02 : RELAY 2 ON 15/10/2019 16:50
03 : NIGHT PURGE ON 16/10/2019 04:35

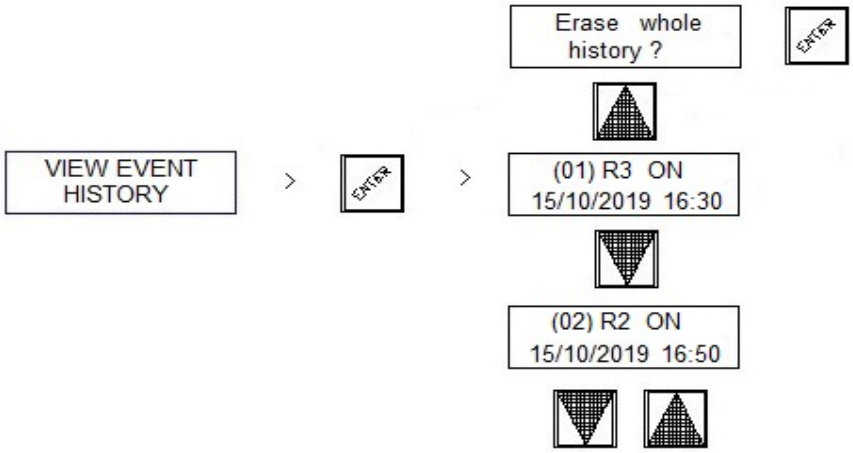

The history can be reset & cleared by pressing the UP button from the 1st event which prompts an "erase history message" question ..pressing ENTER clears the history.

SET *START BY* METHOD *(A/C STOP / START OPERATION)*

To set the A/C system "START BY" method, press the fascia button labeled "**ENTER**" then press the **DOWN** arrow button until the LCD display displays

"SET START BY METHOD "

Press the **ENTER** button to open this menu & see the existing setting, use the UP & DOWN buttons to cycle through the 3 choices :

"TIME SWITCH", "RUN TIMER" or "MANUAL".

Select your choice by pressing the "**ENTER**" button. The display will then return to this parent menu. Exit to the normal running screens by pressing the "**ESC**" button or scroll to another main menu item to edit or check using the "**UP**" or "**DOWN**" arrow buttons.

1.) TIME SWITCH (1) System enabled by the controllers internal main 7 day Time Switch, which can be programmed for a total of 18 possible switching events for individual or groups of days (allowing multiple on/off times per day).

2.) RUN (for) TIMER System operation triggered by a momentary on/off pulse from a switch wired in parallel with the 2 (passive) sensor wires or across the controllers D2 & M terminals. Adjust the timer for the required time i.e. 8 hours. This feature can also be triggered from a movement sensor (turn toggle off setting to NO.) Note a spare relay can be set for use as indication of AHR run.

3.) MANUAL - System 24/7 ON or ON/OFF state set only by an external "System Switch" or external interlock wired in parallel with the 2 sensor wires connected to our passive temperature sensor or alternatively shorting the controllers D1 & M terminals which has the same affect resulting in a "System Off" mode with all relays and analogue outputs de-energized,

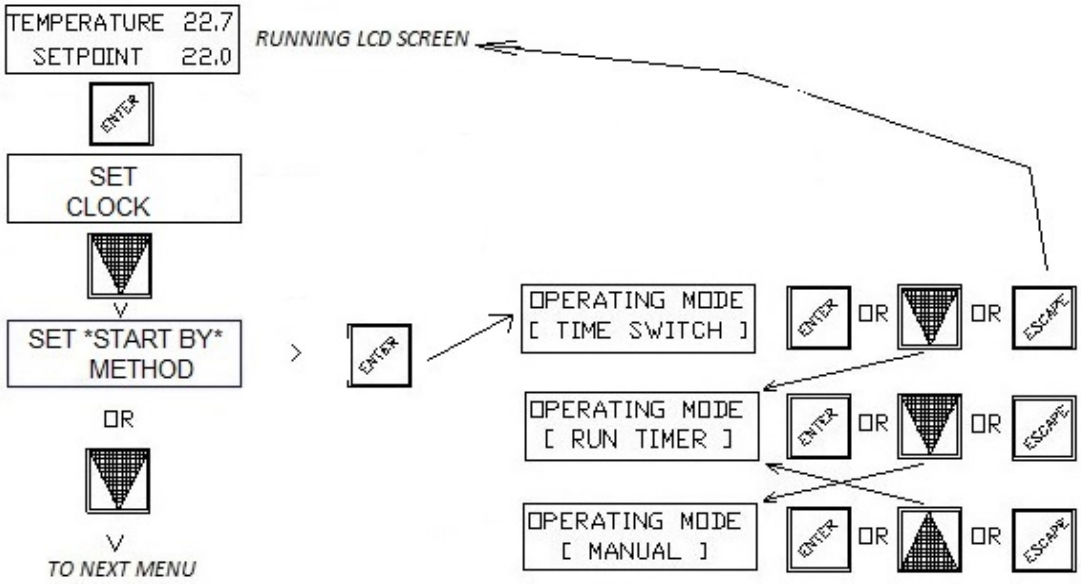

SET CLOCK (TIME & DATE SETTINGS)

To edit the controllers time and date settings, press the fascia button labeled "**ENTER**"

and using the **DOWN** button scroll down the menu until.. **"SET CLOCK"** is displayed. Press the **ENTER** button to check and edit the controllers time, date and day light saving enable (or disable) settings. Daylight saving, if enabled, starts on the 1st Sunday in October (at 2am) and finishes on the 1st Sunday in April (3am)

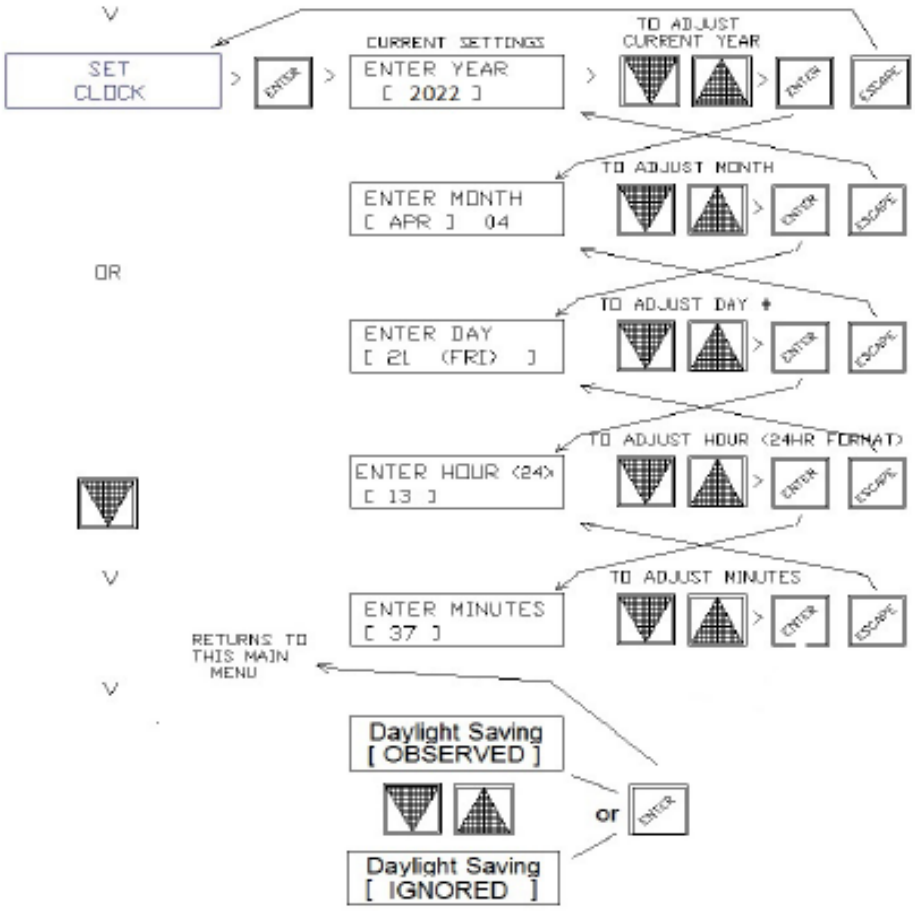

SET MAIN TIME SWITCH (1)

The controller's internal main time switch (1) (if enabled for use) can be easily programmed for any combination of ON/OFF switching times for any day of the week. The controller comes preset with factory default settings for operating the system: Monday to Friday from 08:00 (event 01) until 17:30 (event 02). To edit settings, press the fascia button labeled "**ENTER**" and scroll down through the menu tree until "**SET MAIN TIME SWITCH** (1) " is displayed. Press the "**ENTER**" button to open this menu. The existing detail for switching event 01 is displayed. Unlike other time switches, this controller has very flexible unassigned switching events (instead of fixed sequential ON then OFF routines). Time switching events can be set to switch (change state) at any time & day/s, and set as a switching ON event or OFF event. Typically the switching events would be programmed in the order of ON events (with common days & time) followed by an OFF event with matching days and common OFF time, but any variation is easily programmed. As an example: switching events could be programmed such that switching event 1 (01) turns the system ON for Monday to Friday at 08:30, followed by event 2 (02) turning the system ON Saturday & Sunday at 09:00, then event 3 turning the system OFF Monday to Sunday at 17:30. With this programming approach, multiple & varied ON / OFF events can be set on individual or groups of days, plus there is no issue switching past midnight which most other time switches cant achieve. 18 switching events are available.

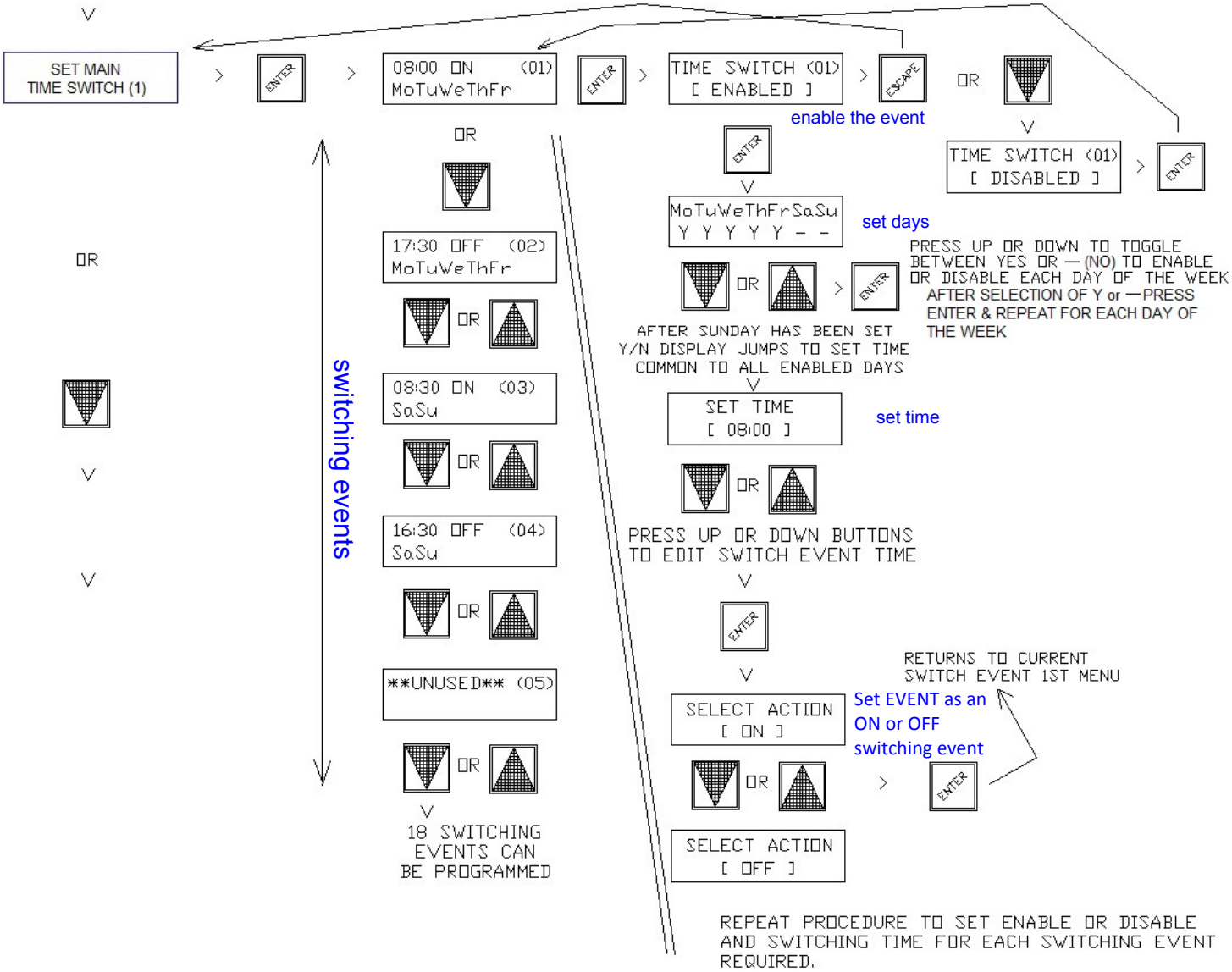

SET AUXiliary TIME SWITCH (2)

The controller's independent Auxiliary Time Switch (2), if enabled for use, can be assigned to any spare relay not already used, and is assigned to a spare relay in the Relay Programming Menu. The Auxiliary Time Switch is basically intended as a simple auxiliary time switch for controlling other equipment not directly associated with temperature control ie : toilet exhaust fans etc, and is programmed using a more conventional time switch technique with programmable "ON" time events followed by "OFF" time events for the relevant days of the week. Note : This Auxiliary time switch has only two sets of ON & OFF settings (paired events) which would typically cover the separate on & off times for week days and weekends. To edit settings, press the fascia button labeled "ENTER" and scroll down through the menu tree until "SET AUX TIME SWITCH (2) "is displayed. Press the "ENTER" button to open this menu. If previously unused the 1st event (01) will display "**UNUSED**". Press the ENTER button to start editing. Press the UP button to change this event to "ENABLED" which is the 1st fixed "ON" event. Press ENTER which will then display an LCD screen to 'enable' the required days , use the UP / DOWN & ENTER buttons to sequentially set "**Y**" to all days that are to be enabled for this 1st (same) "ON" time (leave as "**--**" for disabled days) .After Sunday is entered the display will jump to the "ON" time setting screen - use the UP / DOWN buttons to set the "ON" time, then press ENTER. The controller will then ask should this Auxiliary Time Switch be overridden (to OFF) by the programmed holidays ? (as set in the controllers "HOLIDAY" assignment menu), set "YES" or "NO" using the controller's UP / DOWN buttons and press ENTER. The display returns to this event screen (01). Press the DOWN arrow button to move to the next event screen (02) which is the 1st fixed "OFF" event setting screen, which is in respect to the previous "ON" setting -press ENTER. IF not already "ENABLED" press the DOWN arrow button to ENABLE this event, Press ENTER. Repeat the Y / -- setting for each day of the week which should be set to match the previous "ON" settings, then set the common "OFF" time for these days, press ENTER. Press the ESC button to exit Time Switch 2 programming if only one common on/off times for the week is required **or** press the DOWN arrow button until event (03) is displayed which is a 2nd (fixed as) 'ON' setting ~ Repeat the procedure per events (01) & (02) to set the ON (03) & OFF (04) times & days for these events. The Auxiliary Time Switch is now programmed , press "ESC" a few times to exit out to the main running screen.

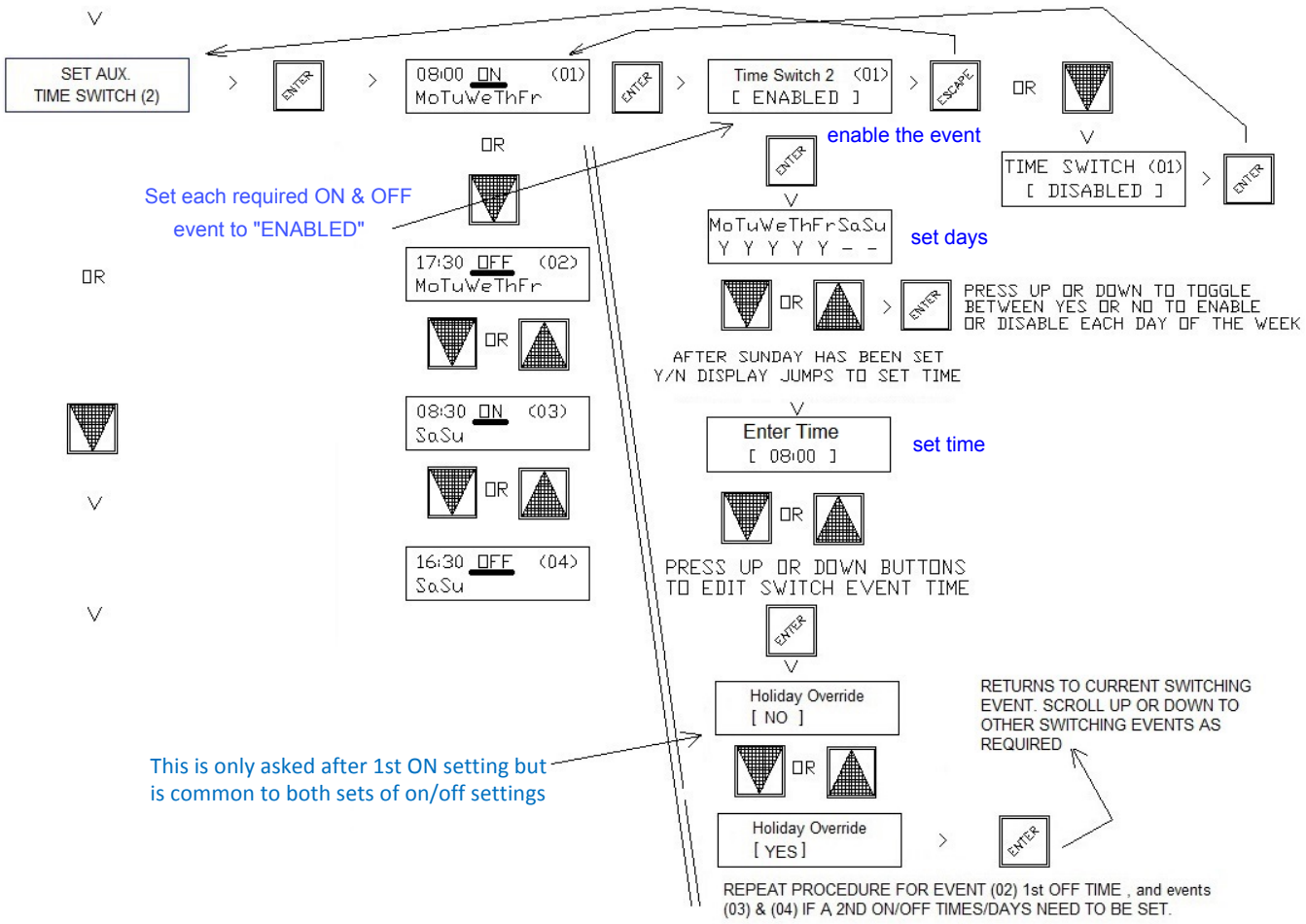

RUN / AHR TIMER

Whether the Run Timer is used as a short duration type “After Hours”(**AHR**) Run timer (if the system normally operates by the controllers internal time switch), or set for a longer period, typically as a **“Run (**For) **Timer"**, the procedure to set up the timer is the same. The timer trigger inputs "D2" or "X1" can be set such that new input pulses causes a toggle on/off or to restart the timer (which suits the use of movement sensors to trigger timer function).
Also note a spare control relay can now be set (AHR mode) to trigger only in timer running mode for an external AHR indication lamp.

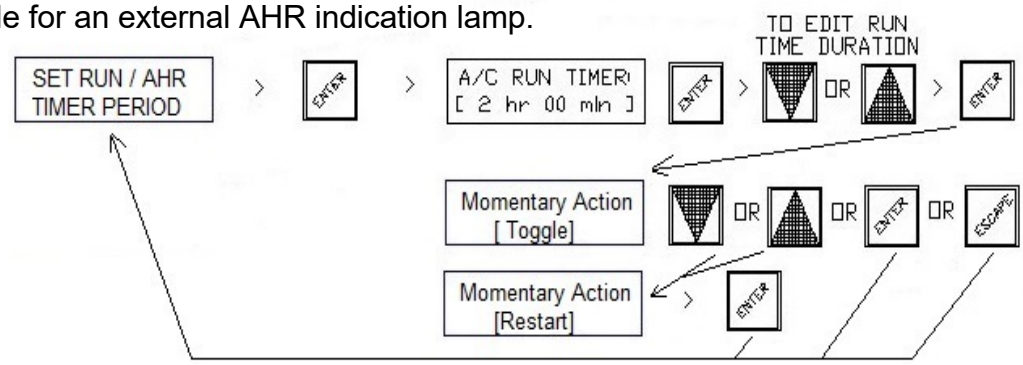

LOAD HOLIDAYS (OFF OVERRIDE) SETUP

Individual or group of dates can be programmed as holiday time switch “OFF” overrides. To edit or set Holiday dates, Press the fascia button labeled “**ENTER**” to have the LCD display jump to the 1st menu item in the menu tree - "SET CLOCK" scroll down through the menu tree with the “**DOWN**” arrow button until “LOAD HOLIDAYS” is displayed. Pressing the “**ENTER**" button will then display either the 1st existing Holiday date or HOLIDAY DISABLED. If disabled, press the “**DOWN**” button to change to ENABLED. Once enabled, the 1st holiday default start date of 1st JAN (01) will be displayed, (01) means the 1st holiday. Using the “**UP** or **DOWN**” buttons scroll through calendar dates until the required 1st HOLIDAY START date is displayed, press “**ENTER**” to then also program the 1st HOLIDAY END date which can either be the same as the start date (if a single day holiday) or a future inclusive date for a group of days (i.e.: Easter or a school holiday term break). The controller asks after each holiday is set whether this holiday OFF override event should only execute once or repeat each year on the same date(/s), set as either ONCE or REPEAT using the “**UP**” or “**DOWN**” buttons, press “**ENTER**” to accept settings then the “**DOWN**” button to jump to the next holiday start date to program. Repeat this procedure until all holiday dates are set.

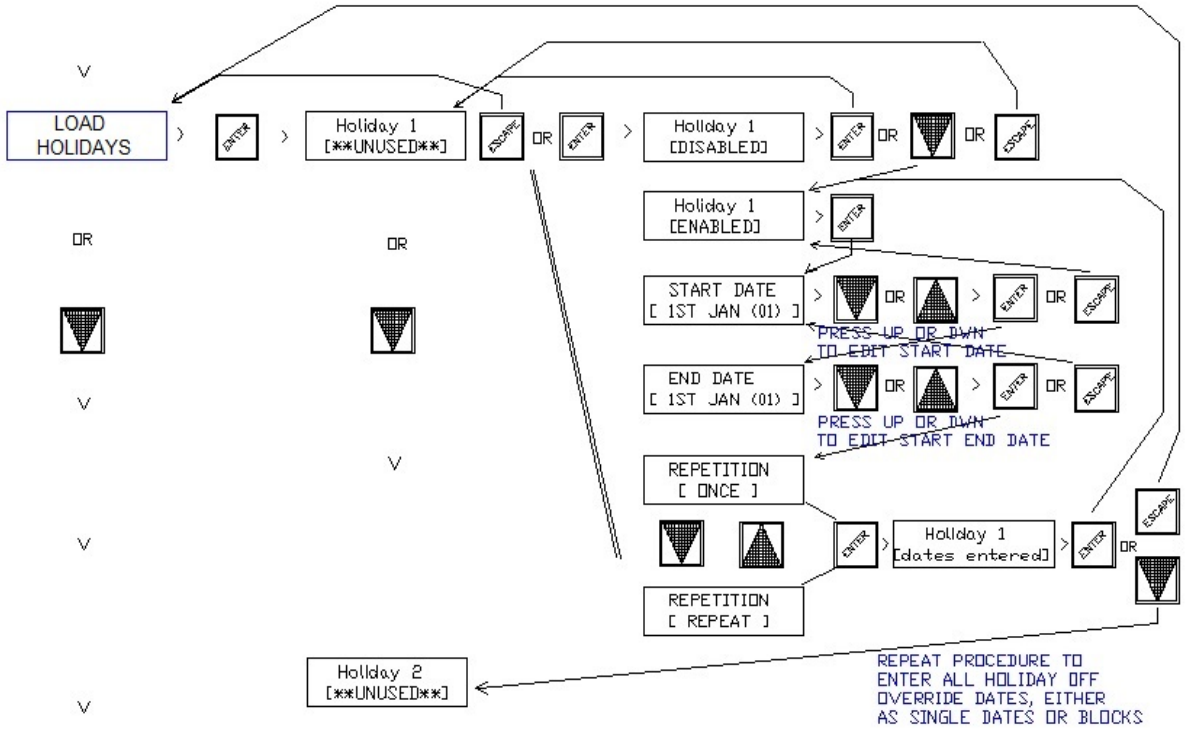

NIGHT PURGE SETUP

With this feature enabled it is possible to setup a low running cost building night time ventilation purge cycle, to vent built up heat from within the building with cooler outside air in order to reduce the cost of mechanical cooling during occupancy hours at startup. During the user programmable **enable times**, if the **room temperature is above the main set point** and the measured **outdoor temperature is cooler** by an adjustable amount to the room temperature, this software will cause the supply fan (connected to relay 5) to energise & the modulating motorised economy cycle dampers (connected to analog output Y1) to reposition to the full fresh air mode. These output states are maintained until the room temperature drops to a settable temperature difference in relation to the outside air temperature or / & the O/A temperature rises above the room temperature setpoint, or the enable time ends.

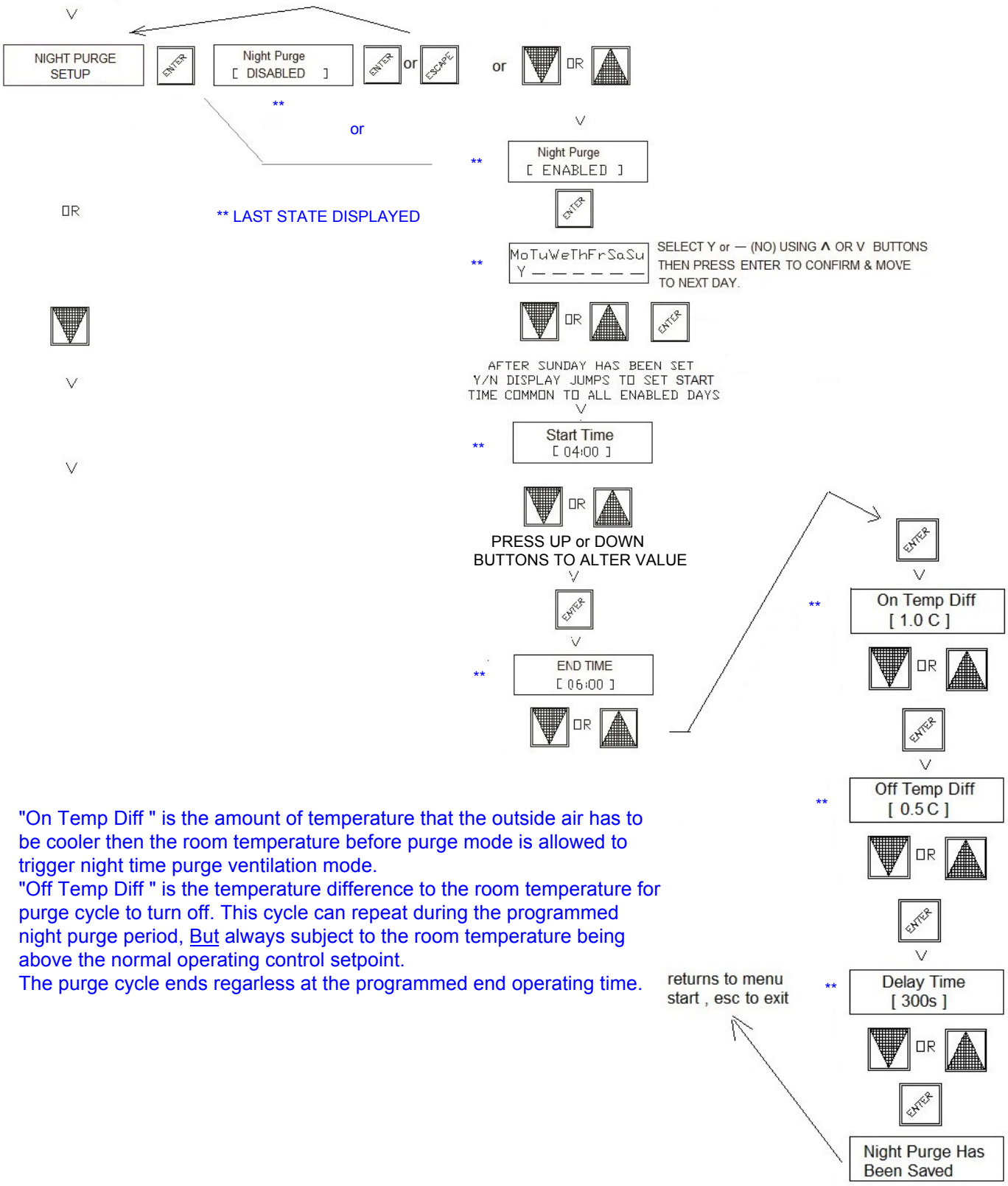

"On Temp Diff " is the amount of temperature that the outside air has to be cooler then the room temperature before purge mode is allowed to trigger night time purge ventilation mode.
"Off Temp Diff " is the temperature difference to the room temperature for purge cycle to turn off. This cycle can repeat during the programmed night purge period, But always subject to the room temperature being above the normal operating control setpoint.
The purge cycle ends regarless at the programmed end operating time.

SCREEN DISPLAY

The Endeavours information LCD screens will by default Auto Scroll displaying one information screen (page) after another relative to the I/O that has been programmed. Alternatively if auto scroll is not preferred the screen can be set to remain on any page and other screens than displayed by pressing the "ESC" button.
To change the default auto scroll setting , press the "ENTER" button and scroll down the menu until "SCREEN DISPLAY" is shown, press "ENTER" and toggle the choice "[Y]" (YES) or "[N]" (NO) using the UP or down buttons.

CONTROLLER FUNCTION *MAIN USE OF CONTROLLER*

The Endeavour controller can be set to operate as a standard temperature controller for control of A/C & Fan Coil Units etc (default use) or set in a reduced control mode as Time Switch **or** X4 I/O **only** mode which if selected inhibits most other functions not relative to the reduced mode.
In **Time Switch only** mode functions enabled are Time Switch 1, Time Switch 2 , Run Timer & AUTO /OFF / ON system overrides modes, this mode responds to time settings under "Time Switch 1" & outputs on relay 5 (terminals 5 & 8).
NOTE : Y1, Y2 & Y3 can also be used in this mode & set to a minimum value to use as a time switch controlled fixed analogue output control ..ie to time switch control an EC fan but at a fixed speed.
In **X4 only mode**, only the secondary control loop using X4 as the sensor input is used driving programmed relays or analogue outputs as required as for example to control a modulating pressure controlled bypass valve using a differential pressure sensor connected to the X4 input.

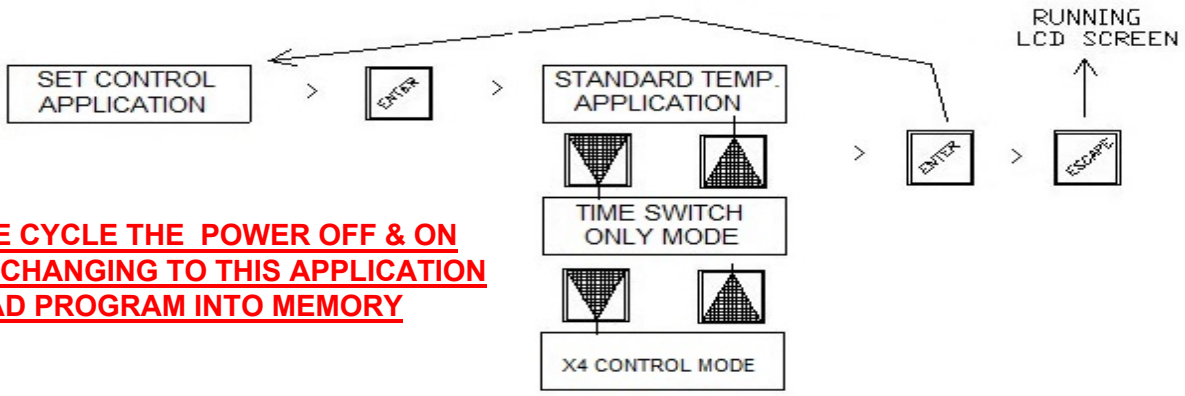

PLEASE CYCLE THE POWER OFF & ON AFTER CHANGING TO THIS APPLICATION TO LOAD PROGRAM INTO MEMORY

PRE-SET PROGRAMS (USER SELECTABLE TO SUIT SITE A/C CONTROL REQUIREMENTS)

The Endeavour is pre-loaded with eleven preset programs to suit most typical control interlock requirements for reverse cycle air conditioners, fan coil units & AHU's.
To select a preset program press the "ENTER" button to enter the menu system and scroll down the list until "**PRESET PROGRAMS**" is displayed, press ENTER to see the current selected program , using the UP or DOWN buttons scroll to the desired suitable program and press ENTER to load this new preset into the controllers memory, its a good idea after this action to cycle the controllers power to ensure the new program is loaded into the microprocessors operating system. The controller will also load these nominal defaults :

X1,2,3 & 4 SET TO PASSIVE IN SOFTWARE (ALSO SET TO PASSIVE BY DEFAULT IN HARDWARE BY JUMPERS ON BOTTOM PCB - see page 23)

NOTE PRE-SETS USING X3 & Y1 FOR ECONOMY CYCLE WILL AUTOMATICALLY ENABLE THE X3 INPUT & THE Y1 OUTPUT

X5 & X6 MODBUS DISABLED IN SOFTWARE BUT ENABLED IN HARDWARE.
X7 (CO2) DISABLED IN SOFTWARE BUT SET TO VOLTAGE INPUT IN HARWARE
RESETS BY OUTSIDE AIR TEMPERATURE & ROOM HUMIDITY=DISABLED
"**SYSTEM ON BY** " = TIME SWITCH,
R5 (FAN RELAY) ON/OFF WITH SYSTEM (NOT CYCLE)
DAY LIGHT SAVING = ENABLED,
RUN TIMER = 2 Hour.
NIGHT PURGE=OFF
LCD SCREEN SCROLL=ON
SETPOINT SET TO 22

NOTE RELAY 5 IS NOT ADJUSTABLE, & PRESET AS THE SYSTEM (TIME SWITCH) ENABLE RELAY, TYPICALLY USED TO ENABLE THE A/C FAN, ALTHOUGH IT CAN BE SET TO CYCLE ON HEAT / COOL DEMAND FOR TYPICAL DOMESTIC TYPE APPLICATIONS WHERE THE FAN TURNS OFF AT SETPOINT.

PRESET PROGRAM SUMMARY LIST.

PROGRAM # 0	FACTORY RESET PROGRAM	TRIPLE COMP.+0-10vDC ECON.+MOD COMP. O/P's *USED FOR TESTING*
PROGRAM # 1	1H / 1C	1 HEAT / 1 COOL
PROGRAM # 2	1H / 1C +ECON.	1 HEAT / 1 COOL +0-10vDC Y1 ECON.CYCLE OUTPUT
PROGRAM # 3	2H / 2C	2 HEAT / 2 COOL
PROGRAM # 4	2H / 2C +ECON.	2 HEAT / 2 COOL +0-10vDC Y1 ECON.CYCLE OUTPUT
PROGRAM # 5	1 CMP. / RVH	SINGLE COMPRESSOR & REVERSING VALVE CALL
PROGRAM # 6	1CP / RVH+EC	SINGLE COMP. & RVH +0-10vDC ECON.CYCLE O/P
PROGRAM # 7	1H / 1C +STG2	HEAT 1, COOL 1 + COMMON STAGE 2 COMPRESSOR
PROGRAM # 8	2 CMP / RVH	TWIN COMP. & REV/VALVE (**EX HEVAC DEFAULT**)
PROGRAM # 9	2 CP / RVH+EC	TWIN COMP./RVH + 0-10vDC ECON. & MOD. COMP. O/P's
PROGRAM # 10	3 CP / RVH+EC	TRIPLE COMP./RVH+0-10vDC ECON.& MOD.COMP. O/P's
PROGRAM # 11	HV+CV+PUMP	HEAT & COOL 0-10vDC MOD. VALVE O/P's +HWP+CWP

New feature - controller now has an additional analogue output Y3 that needs to be manually configured for use

If the Endeavour is forced to a factory reset (2nd last menu item) it will automatically clear the existing program & load **PROGRAM # 0** which is mainly intended as a test program for quick testing of all outputs etc using minimum time delays, similar to preset program 10 but without the compressor start delays.

PROGRAM # 0 Outputs will be set as follows for 3 COMP./ REV.VALVE +ECON.CYCLE + MOD. COMPRESSOR

RELAY	MODE	DEADBAND	SWITCH DIFF.	TIME DELAY	COMMENTS
1	HEAT+COOL	3	1.0	10 secs	COMP.3 RELAY
2	HEAT+COOL	2	0.7	10 secs.	COMP.2 RELAY
3	HEAT+COOL	1	0.3	10 secs.	COMP.1 RELAY
4	HEAT	0.4	0.3	10 secs	R/V HEAT

ANALOGUE	MODE	DEADBAND	P.BAND	P/P+I	COMMENT
Y1	COOL	0	1.0	P	ECON.CYCLE O/P
Y2	HEAT+COOL	1	1.0	P	MOD. COMP. O/P
Y3	HEAT+COOL	1	1.0	P	

PRESET PROGRAM # 1 1H/1C (1STAGE HEAT /1 STAGE COOL HEAT / COOL TYPE A/C UNIT

SEE PAGE 31 FIG.9

TYPICAL OF OLD APAC & DAIKIN UNITS

RELAY	MODE	DEADBAND	SWITCH DIFF.	TIME DELAY	COMMENTS
1	-	-	-	-	
2	-	-	-	-	
3	HEAT	1.0	0.3	1 Min.	HEAT CALL
4	COOL	1.0	0.3	1 Min.	COOL CALL

ANALOGUE	MODE	DEADBAND	P.BAND	P/P+I	COMMENT
Y1	-	-	-	-	
Y2	-	-	-	-	

PRESET PROGRAM # 2 1H/1C+ECON (1 HEAT /1 COOL + ECON.CYCLE) ..HEAT/COOL TYPE A/C

SEE PAGE 31 FIG.9

RELAY	MODE	DEADBAND	SWITCH DIFF.	TIME DELAY	COMMENTS
1	-	-	-	-	
2	-	-	-	-	
3	HEAT	1.0	0.3	1 Min.	HEAT CALL
4	COOL	1.0	0.3	1 Min.	COOL CALL

ANALOGUE	MODE	DEADBAND	P.BAND	P/P+I	COMMENT
Y1	COOL	0.0	1.0	P	ECON.CYCLE 0-10vDC
Y2	-	-	-	-	

PRESET PROGRAM # 3 2H/2C (2 STAGE HEAT / 2 STAGE COOL) ..HEAT/ COOL TYPE A/C UNIT

SEE PAGE 31 FIG.10

TYPICAL OF DAIKIN UNITS

RELAY	MODE	DEADBAND	SWITCH DIFF.	TIME DELAY	COMMENTS
1	HEAT	2.0	0.7	2 Min.	HEAT STG 2 CALL
2	HEAT	1.0	0.3	1 Min.	HEAT STG 1 CALL
3	COOL	1.0	0.3	1 Min.	COOL STG 1 CALL
4	COOL	2.0	0.7	2 Min.	COOL STG 2 CALL

ANALOGUE	MODE	DEADBAND	P.BAND	P/P+I	COMMENT
Y1	-	-	-	-	
Y2	-	-	-	-	

PRESET PROGRAM # 4 2H/2C+ECON (2 HEAT/2 COOL+ECON.CYCLE)..HEAT/ COOL TYPE A/C UNIT

SEE PAGE 31 FIG.10

RELAY	MODE	DEADBAND	SWITCH DIFF.	TIME DELAY	COMMENTS
1	HEAT	2.0	0.7	2 Min.	HEAT STG 2 CALL
2	HEAT	1.0	0.3	1 Min.	HEAT STG 1 CALL
3	COOL	1.0	0.3	1 Min.	COOL STG 1 CALL
4	COOL	2.0	0.7	2 Min.	COOL STG 2 CALL

ANALOGUE	MODE	DEADBAND	P.BAND	P/P+I	COMMENT
Y1	COOL	0.0	1.0	P only	0-10vDC ECON. CYCLE
Y2	-	-	-	-	

PRESET PROGRAM # 5 1COMP/RVH (1 STAGE COMP. / RVH) .. COMP / R/V TYPE A/C UNIT

SEE PAGE 31 FIG.11 *TYPICAL OF MOST SINGLE COMPRESSOR REVERSE CYCLE UNITS INCLUDING TEMPERZONE, ARMCOR & ACTRON*

RELAY	MODE	DEADBAND	SWITCH DIFF.	TIME DELAY	COMMENTS
1	-	-	-	-	
2	-	-	-	-	
3	HEAT +COOL	1.0	0.3	1 Min.	COMP. CALL
4	HEAT	0.4	0.3	10 sec.	RVH CALL

ANALOGUE	MODE	DEADBAND	P.BAND	P/P+I	COMMENT
Y1	-	-	-	-	
Y2	-	-	-	-	

PRESET PROGRAM # 6 1CP/RVH+EC (1 STAGE COMP./ RVH+ECON. CYCLE) COMP./RV TYPE UNIT

SEE PAGE 31 FIG.11

RELAY	MODE	DEADBAND	SWITCH DIFF.	TIME DELAY	COMMENTS
1	-	-	-	-	
2	-	-	-	-	
3	HEAT +COOL	1.0	0.3	1 Min.	COMP. CALL
4	HEAT	0.4	0.3	10 sec.	RVH CALL

ANALOGUE	MODE	DEADBAND	P.BAND	P/P+I	COMMENT
Y1	COOL	0.0	1.0	P only	0-10vDC ECON.CYCLE
Y2	-	-	-	-	

PRESET PROGRAM # 7 1H/1C+STG2 HEAT 1 / COOL 1 + STAGE 2 COMPRERSSOR

SEE PAGE 31 FIG.12 *TYPICAL OF OLD APAC & YORK MILLENNIUM A/C UNITS*

RELAY	MODE	DEADBAND	SWITCH DIFF.	TIME DELAY	COMMENTS
1	-	-	-	-	
2	HEAT+COOL	2.0	0.7	2 Min	STAGE 2 CALL
3	HEAT	1.0	0.3	1 Min.	HEAT CALL
4	COOL	1.0	0.3	1 Min.	COOL CALL

ANALOGUE	MODE	DEADBAND	P.BAND	P/P+I	COMMENT
Y1	-	-	-	-	
Y2	-	-	-	-	

PRESET PROGRAM # 8 2COMP/RVH (2 STAGE COMP. / RVH) .. COMP/ RVH TYPE A/C UNIT

SEE PAGE 31 FIG.13 ******EX HEVAC DEFAULT******

RELAY	MODE	DEADBAND	SWITCH DIFF.	TIME DELAY	COMMENTS
1	-	-	-	-	
2	HEAT +COOL	2.0	0.7	2 Min.	COMP.2 CALL
3	HEAT +COOL	1.0	0.3	1 Min.	COMP.1 CALL
4	HEAT	0.4	0.3	10 sec.	RVH CALL

ANALOGUE	MODE	DEADBAND	P.BAND	P/P+I	COMMENT
Y1	-	-	-	-	
Y2	-	-	-	-	

PRESET PROGRAM # 9 2CP/RVH+EC (2 STAGE COMP./ RVH+0-10v ECON + MOD.COMP. O/P's)

SEE PAGE 31 FIG.13

COMPRESSOR / REVERSING VALVE TYPE UNIT

RELAY	MODE	DEADBAND	SWITCH DIFF.	TIME DELAY	COMMENTS
1	-	-	-	-	
2	HEAT +COOL	2.0	0.7	2 Min.	COMP.2 CALL
3	HEAT +COOL	1.0	0.3	1 Min.	COMP.1 CALL
4	HEAT	0.4	0.3	10 sec.	RVH CALL

ANALOGUE	MODE	DEADBAND	P.BAND	P/P+I	COMMENT
Y1	COOL	0.0	1.0	P only	0-10vDC ECON.CYCLE
Y2	HEAT+COOL	1.0	1.0	P only	0-10vDC MOD.COMP.1 O/P

NOTE : Y3 CAN NOW ALSO BE SET AS A MODULATING OUTPUT TO VARY COMP.2 ..SET SAME AS Y2 BUT DB=2.0

PRESET PROGRAM # 10 3CP/RVH+EC (3 STAGE COMP./ RVH+0-10v ECON +MOD.COMP. O/P's)

SEE PAGE 31 FIG.14

COMPRESSOR / REVERSING VALVE TYPE UNIT

RELAY	MODE	DEADBAND	SWITCH DIFF.	TIME DELAY	COMMENTS
1	HEAT +COOL	3.0	1.0	3 Min.	COMP.3 CALL
2	HEAT +COOL	2.0	0.7	2 Min.	COMP.2 CALL
3	HEAT +COOL	1.0	0.3	1 Min.	COMP.1 CALL
4	HEAT	0.4	0.3	10 sec.	RVH CALL

ANALOGUE	MODE	DEADBAND	P.BAND	P/P+I	COMMENT
Y1	COOL	0.0	1.0	P only	0-10vDC ECON.CYCLE
Y2	HEAT+COOL	1.0	1.0	P only	0-10vDC MOD.COMP 1.

Y3 CAN ALSO NOW BE SET TO MODULATE COMP.2 OR FAN SPEED CONTROL IF REQUIRED.

PRESET PROGRAM # 11 HV+CV+PUMP (HEAT & COOL 0-10vdc O/P's +HWP & CWP)

TYPICAL OUTPUTS FOR FAN COIL UNIT

RELAY	MODE	DEADBAND	SWITCH DIFF.	TIME DELAY	COMMENTS
1	-	-	-	-	
2	-	-	-	-	
3	HEAT	0.5	0.3	1 Min.	HEAT CALL
4	COOL	1.0	0.3	1 Min.	COOL CALL

ANALOGUE	MODE	DEADBAND	P.BAND	P/P+I	COMMENT
Y1	HEAT	0.4	2.0	60 Mins	0-10vDC TO HEAT VALVE
Y2	COOL	0.9	2.0	60 Mins	0-10vDC TO COOL VALVE

R1-4 RELAY EDITING (MANUAL EDITING / ASSIGNMENT)

To set or edit the Relay modes of operation and switching parameters etc, Press the fascia button labeled "**ENTER**" & using the **"DOWN"** button scroll down through the menu until "RELAY PROGRAMMING" is displayed. Press the "**ENTER**" button to open this menu. A "**summary screen**" (not editing screen) is then be displayed for Relay 1, the other 3 relay summary screens can be seen by simply scrolling up or down this sub menu using the "**UP**" or **DOWN**" arrow buttons. To edit the parameters for a particular relay, whilst at its summary

screen press the "**ENTER**" button to display its 1st item to edit which is "**MODE**" of operation.

The relays can be set as :

"UNUSED"	Relay not used
"COOL ONLY" (**C**)	Relay operates when the temperature is above the setpoint
"HEAT ONLY" (**H**)	Relay operates when the temperature is below the setpoint
"HEAT & COOL" (**B**)	Which means the relay operates as BOTH a Heating & a Cooling stage mirrored on both sides of the setpoint
"CO2" (**0**)	Input X7 dedicated CO2 input controlled relay output
"TIME SW 2"	Auxiliary time switch used for other time switch controlled output
"X4 RISING" (X)	Relay can be set to energise on rising voltage or temperature
"X4 FALLING" (X)	Relay can be set to energise on falling voltage or temperature
"Y1 RISING" (Y)	Relay can be set to energise on rising analog Y1 output
"Y1 FALLING" (Y)	Relay can be set to energise on falling analog Y1 output
"Y2 RISING" (Y)	Relay can be set to energise on rising analog Y2 output
"Y2 FALLING" (Y)	Relay can be set to energise on falling analog Y2 output
"AHR"	Relay operates when system on due to After Hours Run operation

If a relay is not required, to save confusion, set it to "UNUSED" (it's associated led will also be disabled).

A HEATING STAGE SUMMARY SCREEN

R	M	D_B	S_D	Tdly
4	H	0.5	0.3	0:10

CO2 SUMMARY SCREEN

R	M	ON	OFF	Tdly
1	0	1000	700	0:10

SCREEN LABEL DESCRIPTIONS

(M) MODE: Sets what control function the relay serves : HEAT, COOL, BOTH, CO2, Auxiliary Time Switch or responds from ext I/P on X4 or Y1/Y2.

(DB) DEADBAND: The temperature gap in degrees C, from the controllers setpoint to turn on a relay stage.

(S_D) SWITCH DIFFERENTIAL : The amount of temperature change in degrees C back towards the setpoint to turn the stage off again.

(Tdly) SWITCH DELAY : Delay in Minutes & Seconds until the relay stage turns on after exceeding the deadband setting.

RELAY PARAMETERS EDITING... continued

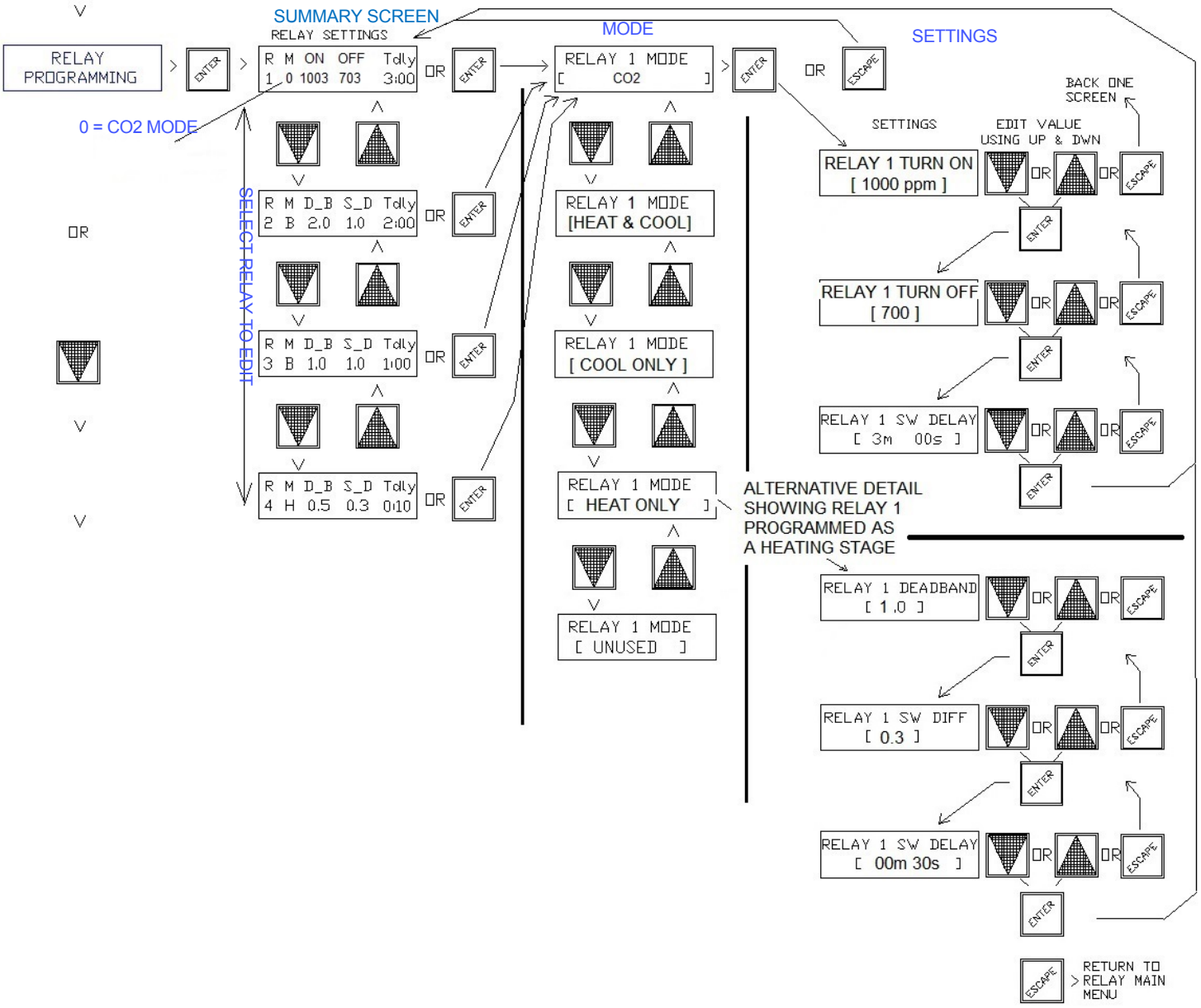

R5 FAN CONTROL METHOD > CYCLE OR CONTINOUS ACTION

The ENDEAVOUR has the ability to cycle the fan relay (R5) with heat / cool demand whilst the air conditioning system is enabled to run (whether that be "ON BY" : Time Switch, Run Timer or set to operate by Manual on/off switch) . R5 can be set to remain ON continuously (default) during the ON running period of the system **or** be set to cycle on & off when a relay programmed as a heating or cooling temperature control stage starts & stops. To set the fan control method of R5, press the fascia button labeled "ENTER" and scroll down through the menu tree until " R5 FAN CONTROL METHOD " is displayed. Press the "ENTER" button to open this menu. The existing method is displayed. The fan cycle method is a typical mode of fan operation in a domestic installation to save on power & noise but in commercial buildings typically regulations call for the fan to remain on continuously whilst the building is occupied to meet minimum building ventilation requirements, if however minimum ventilation is achieved by some other means, it may be preferable to have the fan cycle with the heating or cooling as required to reduce drafts & noise when the temperature is comfortable.

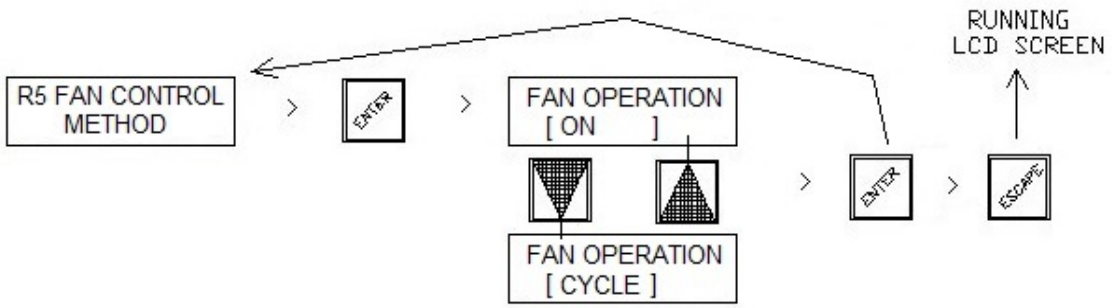

Y1, Y2 & Y3 ANALOGUE (OUTPUTS) EDITING

To set or edit the three analogue outputs (Y1,Y2 & Y3) for mode of operation and output characteristics, Press the fascia button labeled "ENTER" to have the LCD display jump to the 1st menu item in the menu tree - "SET CLOCK". Scroll down through the menu tree with the "DOWN" button until "Y1 / 2 / 3 ANALOGUE MANUAL EDITING" is displayed. Press the "**ENTER**" button to open this menu. A summary screen is then displayed for Analogue output Y1, The other analogue output screens can be seen by simply scrolling down this sub menu using the "**DOWN**" arrow button. To edit the parameters for a particular analogue output, whilst at its summary screen press the "**ENTER**" button to display its 1st item to edit which is "MODE" of operation -: the analogue outputs can be set as a DISABLED, COOL ONLY, HEAT ONLY, "HEAT & COOL" , X4 RISING, X4 FALLING. "HEAT & COOL" (BOTH) means the analogue output will function as both a heating and a cooling output with its parameters mirrored to operate on either side of the controller's setpoint: if for example the deadband is set to 1 degree, then the analogue output will start to produce a DC output voltage from 1 degree above and 1 degree below setpoint. If an analogue output is not needed it can be set to "DISABLED". If Y1,Y2 & Y3 are all disabled they will not appear in the scrolling running display screens. It is also possible to set each Y outputs min & max O/P values, but note the minimum value is overridden and set to 0v when the controller is in the OFF mode. The three Y analogue outputs can be interlocked to control a spare internal relay on either a rising or falling signal typically used to interlock a relay function with the modulating travel of an actuator to act as an axillary switch.

Y1,Y2 & Y3 can also be directly controlled from X4 to function as an independent analogue control loop.

Y1,Y2 & Y3 ANALOGUE (OUTPUTS) EDITING…CONTINUED

EXAMPLE OF ANALOGUE SUMMARY SCREEN

Y = ANALOGUE O/P # (Y1 or Y2)
M = MODE OF OPERATION (H,C or B)
D_B = DEADBAND (0-25c)
P_B = PROPOTIONAL BAND (1-25c)
P+I = INTEGRAL TIME (1-60min or -P- only)

Y	M	D_B	P_B	P+1
1	C	0.0	1.0	-P-

MODE : Y output used as a Heating O/P, Cooling O/P or set to act as BOTH (mirrored Heating & Cooling O/P), or to directly respond to the X4 analogue input.

DEADBAND : The temperature gap from the controller's setpoint till the Y produces an O/P

PROB(portional) BAND : The change of temperature over which the Y O/P would increase to 10volts

INT(egral) TIME : Time in minutes that the integral action adds the P only output to itself over the integral time setting. Note P+I action starts as the output produced by proportional only O/P exceeds 10%.

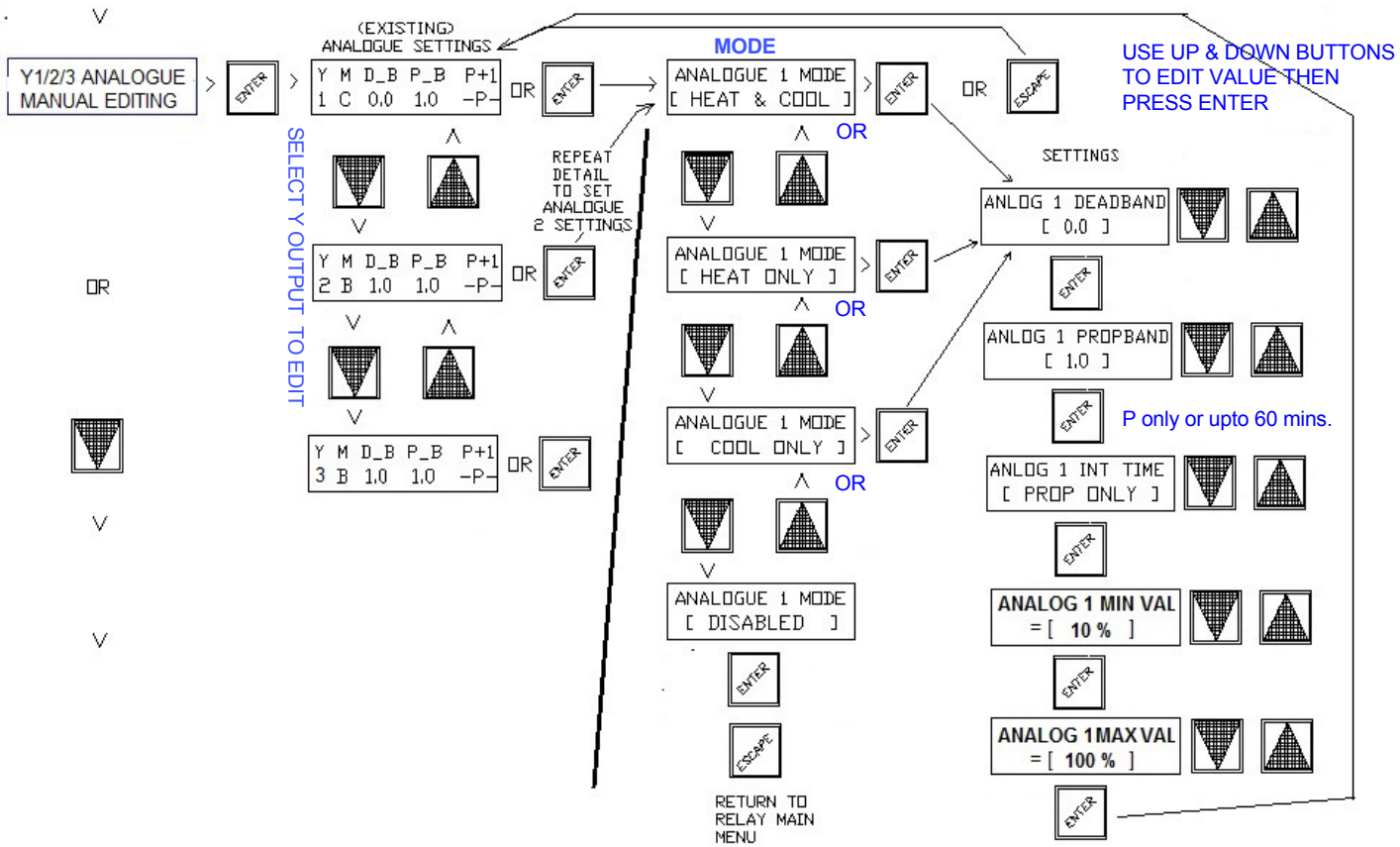

NOTE AS OF V2.45: Y1 & Y2 USE CAN NOW BESIDES HEAT/ COOL APPLICATIONS CAN BE SET TO DIRECTLY REACT TO AN INPUT ON X4 (RISING OR FALLING) AS AN INDEPENDANT EXTRA I/O CONTROL LOOP. see page 20.

Another possible alternative use for the Y1,Y2 or Y3 analogue outputs could be for use as an EC FAN time switch controlled run & speed setting DC output, the controller could be set to time switch only mode but with Y1 (as an example) set to a minimum output of 50% {5v}, which is still accessible even in time switch only mode. When the time switch 1 is ON, Y1 would produce 5v (EC fan ~ 50%) and when the time switch turns off the Y1 output would return to 0v output.

CONTROLLER BOTTOM PCB SHOWING SENSOR PASSIVE / ACTIVE SELECTION PINS

SETTING JUMPER PINS TO SUIT SENSOR TYPE

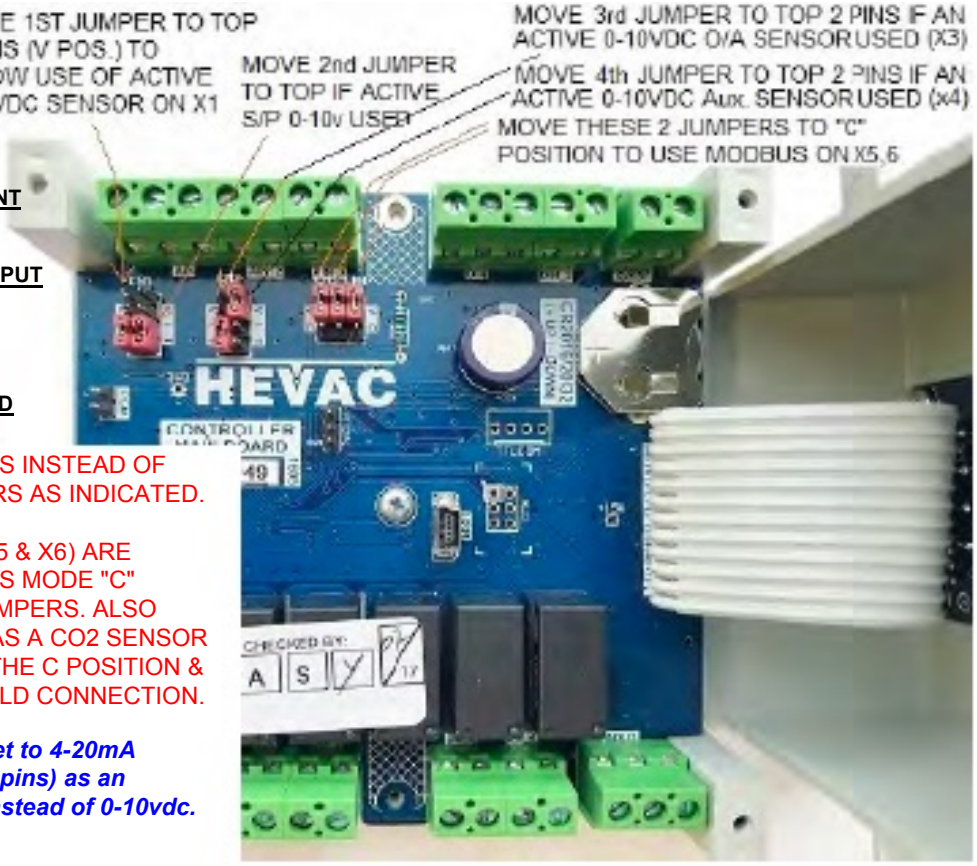

CN1-1 :X1 MAIN SENSOR
CN1-2 :X2 REMOTE SETPOINT

CN2-1 : X3 O/A SENSOR
CN2-2 : X4 AUX. ANALOG INPUT

CN3-1 : X5 MODBUS A
CN3-2 : X6 MODBUS B
CN3-3 : X7 CO2 SENSOR OR MODBUS SHIELD

TO USE ACTIVE SENSORS INSTEAD OF PASSIVE , MOVE JUMPERS AS INDICATED.

MODBUS (TERMINALS X5 & X6) ARE FACTORY SET TO COMMS MODE "C" USING THE CN3-1 & 2 JUMPERS. ALSO IF X7 ISNT BEING USED AS A CO2 SENSOR INPUT, MOVE CN3-3 TO THE C POSITION & USE X7 FOR CABLE SHIELD CONNECTION.

X1-X4 can now also be set to 4-20mA current inputs (CN mid 2 pins) as an alternative active input instead of 0-10vdc.

X1 TEMP. SENSOR CONFIGURATION (sensor type & span settings)

X1 is the main temperature sensor input that the operating setpoint relates to. The input can be set either as a Passive (Hevac type -D sensors) (default) or as an Active type (0-10vdc) in software but must also be selected as a passive or active type in hardware with a small jumper (CN1) on the bottom circuit board to match the software setting. Offset (cal) adjustment is settable for both passive & active types & for active sensors the maximum range is also adjustable ie: 10v = 20 ~ 100c

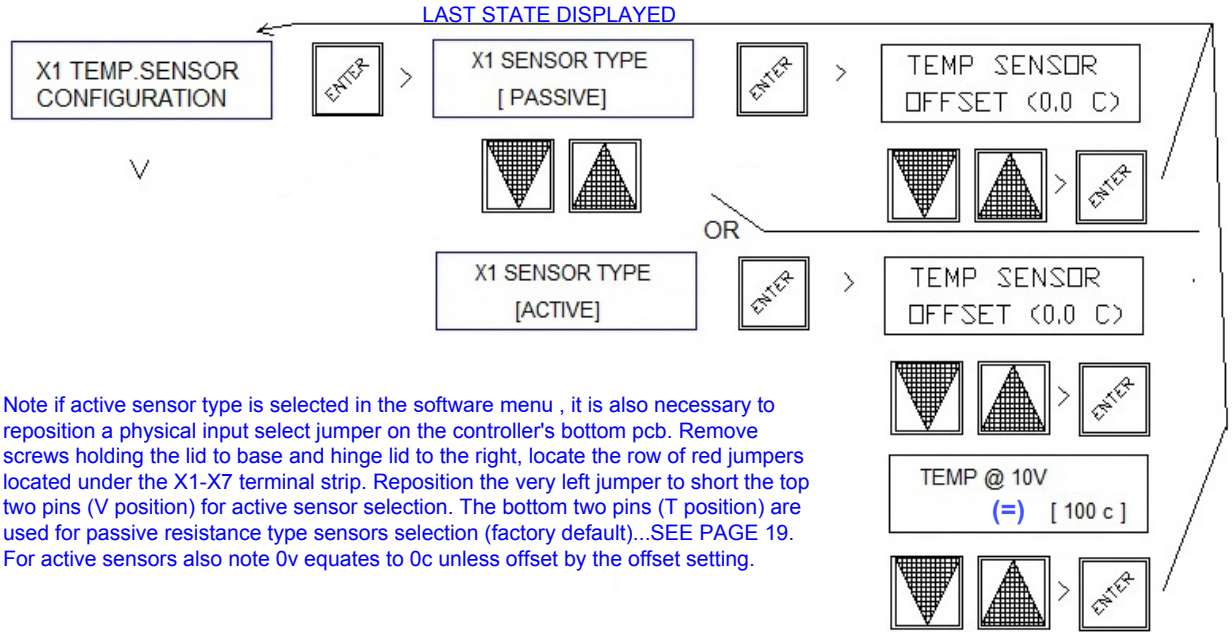

Note if active sensor type is selected in the software menu , it is also necessary to reposition a physical input select jumper on the controller's bottom pcb. Remove screws holding the lid to base and hinge lid to the right, locate the row of red jumpers located under the X1-X7 terminal strip. Reposition the very left jumper to short the top two pins (V position) for active sensor selection. The bottom two pins (T position) are used for passive resistance type sensors selection (factory default)...SEE PAGE 19.
For active sensors also note 0v equates to 0c unless offset by the offset setting.

X2 REMOTE SET POINT CONFIGURATION

A Remote Set Point device (either passive or active) can be connected to the controller. If a passive adjuster is connected (default setting), the controller will automatically detect and hand over set point adjustment authority to the remote device (then ignoring the controllers UP & DOWN buttons for set point adjustment). A (passive) remote set point potentiometer can be built into a room temperature sensor - Hevac room sensor model SRT-D**SP** or supplied as a separate stand alone device model SPA-D. The range of the passive remote set point is fixed at 18 to 25 degrees over 0 to 10K. If an active remote set point is used the 0.6-10vDC signal is configurable from -5 to +5c for 0v & adjustable upto 100c for 10v. Note when in active mode, input voltages below 0.5 disable remote setpoint.

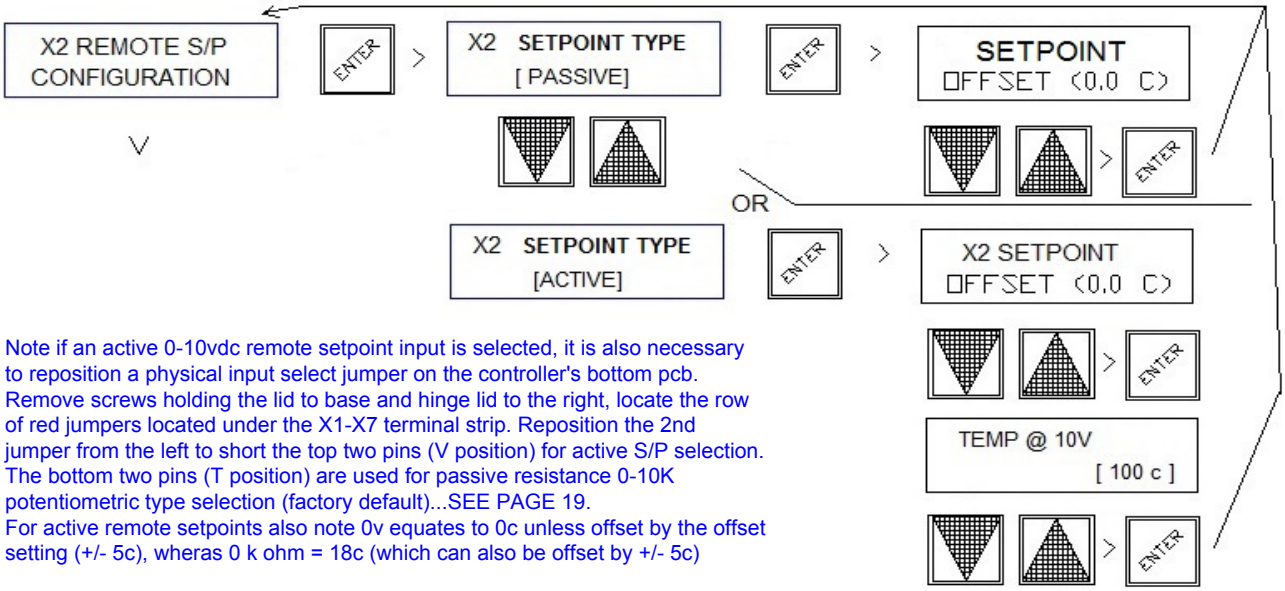

Note : as a service aid, any remote setpoint can be virtually temporarily disconnected and return setpoint control back to the Endeavour UP & DOWN buttons. Press & hold the UP & DOWN buttons for 5 seconds to trigger this mode. Setpoint control will automatically return to remote control after 10 minutes or can be reset by again pressing & holding the UP & DOWN buttons.

X3 O/AIR TEMPerature SENSOR CONFIG. (+ O/A INDUCED S/P SHIFT)

Economy cycle operation using analogue output Y1 can be interlocked with an outside air temperature sensor (either passive or active) connected to terminal X3, such that the use of a modulating motorised economy cycle damper set is inhibited for temperature control unless the outside air temperature is more favorable for temperature control then using recycled air from the controlled space. A low limit outside air temperature can also be set to inhibit Y1 economy cycle output if the O/A temperature is below an adjustable setting. Also **new to this version** is the ability to add an AIR-ON sensor to terminal X4 to limit & control the use of fresh air economy mode to maintain a minimum air on temperature.

X3 Can now also be used for outdoor compensation (reset) of the controllers temperature setpoint so as to match temperature comfort perceptions relative to the outdoor temperature. Winter & summer start, range & authority settings are all adjustable in the menu.

To enable the outside air temperature input, Press the fascia button labeled "**ENTER**" to have the LCD display jump to the 1st item in the menu tree "SET CLOCK", then scroll down the menu tree list with the "**DOWN**" arrow button until "X3 O/AIR TEMP.CONFIGURATION" is displayed. Press the "**ENTER**" button to open this menu and the existing status is displayed. If "DISABLED" is displayed press the "**DOWN**" arrow button to change the setting to 'ENABLED" then press "**ENTER**".

Use the screen legend on page 19 to enter & edit settings.

SENSOR TYPE: PASSIVE: 4K@25C 2 wire Sensor (SOT-D) or
ACTIVE: 0-10V~0-100C 3 wire Sensor (OSAO)

O/A TEMP Y1 low limit O/P lock out : < 0-20C (factory default =12c)

ALLOW Y1 IF O/A BETTER (then room) BY : 0.3-10C (factory default=0.5)

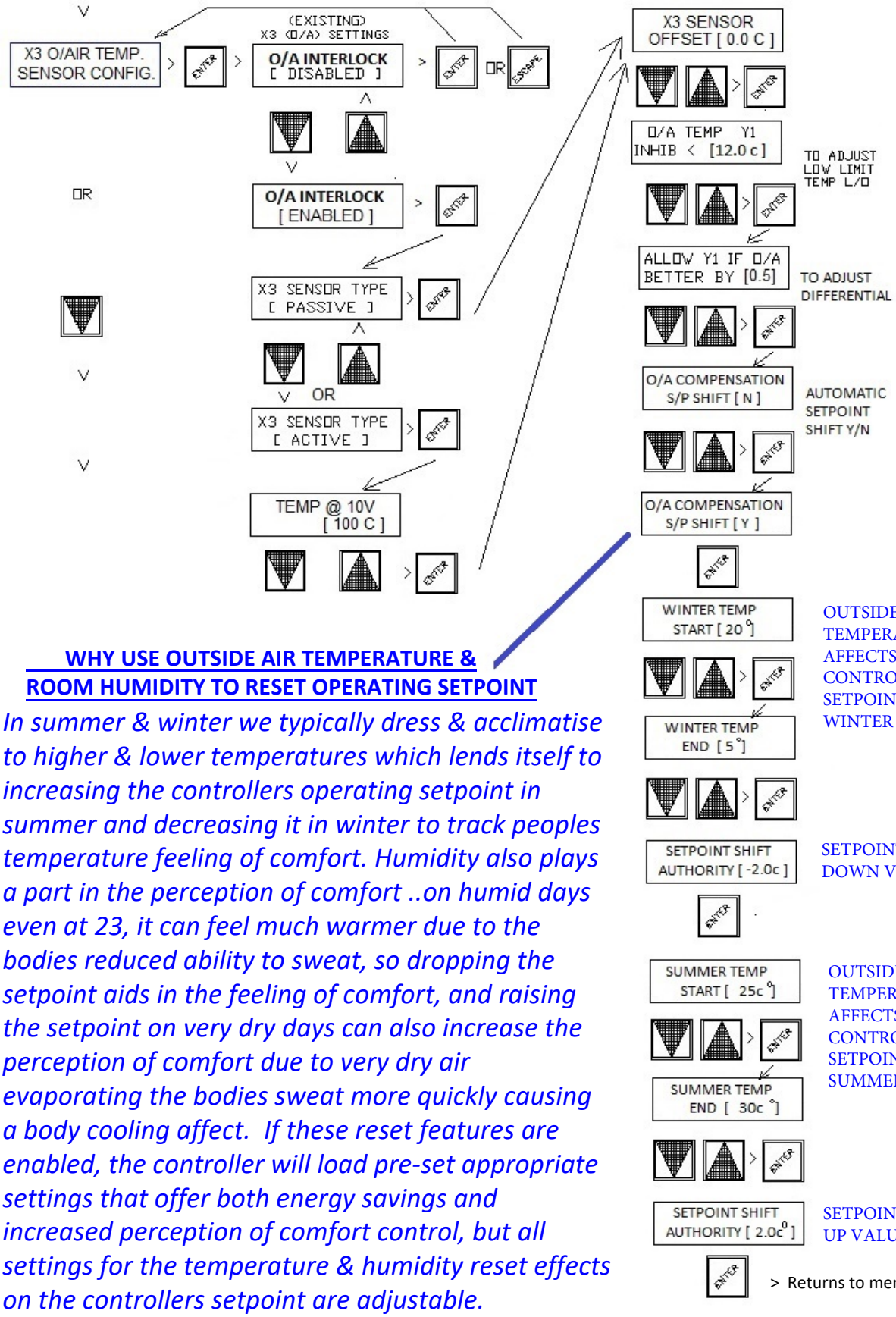

WHY USE OUTSIDE AIR TEMPERATURE & ROOM HUMIDITY TO RESET OPERATING SETPOINT

In summer & winter we typically dress & acclimatise to higher & lower temperatures which lends itself to increasing the controllers operating setpoint in summer and decreasing it in winter to track peoples temperature feeling of comfort. Humidity also plays a part in the perception of comfort ..on humid days even at 23, it can feel much warmer due to the bodies reduced ability to sweat, so dropping the setpoint aids in the feeling of comfort, and raising the setpoint on very dry days can also increase the perception of comfort due to very dry air evaporating the bodies sweat more quickly causing a body cooling affect. If these reset features are enabled, the controller will load pre-set appropriate settings that offer both energy savings and increased perception of comfort control, but all settings for the temperature & humidity reset effects on the controllers setpoint are adjustable.

X4 AUXILIARY INPUT CONFIG. (+ HUMIDITY INDUCED MAIN SETPOINT SHIFT)

X4 is a powerful universal auxiliary analogue monitoring & control input & can be used to simply measure & display another resistance (passive) temperature sensor (ie supply air temp.) or any active 0-10vdc input. This input can also be used to control spare internal controller relays or "Y" analogue outputs for auxiliary control requirements, ie a relay output in response to a 0-10vDC output from humidity sensor connected to X4. This input value is available in the modbus output for zone display information to the Hevac HMI panel or to a 3rd party BMS system. If the input is 0-10v type it must be set to active mode in both software & hardware by a small jumper (CN2-2) on the bottom circuit board to match the active software setting. Offset (or cal) adjustment is settable for both passive & active types, for active sensors the maximum range is also adjustable ie: max input of 10v = 500c, 100%, 200pa, 2000ppm or 10 volts. X4 can now also be used as a humidity input to reset (shift) the controllers operating setpoint for greater comfort control due to extreme humidity values. To set the input to active mode remove screws holding the lid to base and hinge lid to the right, locate the row of jumpers located under the X1-X7 terminal strip. Reposition the CN2-2 jumper (4th of 7 jumpers from left) to short the top two pins (V position) for active voltage sensor selection or mid "i" pins for current type. The bottom two pins (T position) are used for passive resistance type sensors selection (factory default). **For X4 operating as an independent control loop input, see relay & analogue output programming & editing on pages 19 ~21 and select particular output as X4 control (rising or falling) with appropriate settings > On, Off & Time delay for relay outputs and/or Start, Range & P / P+I for analogue outputs.**

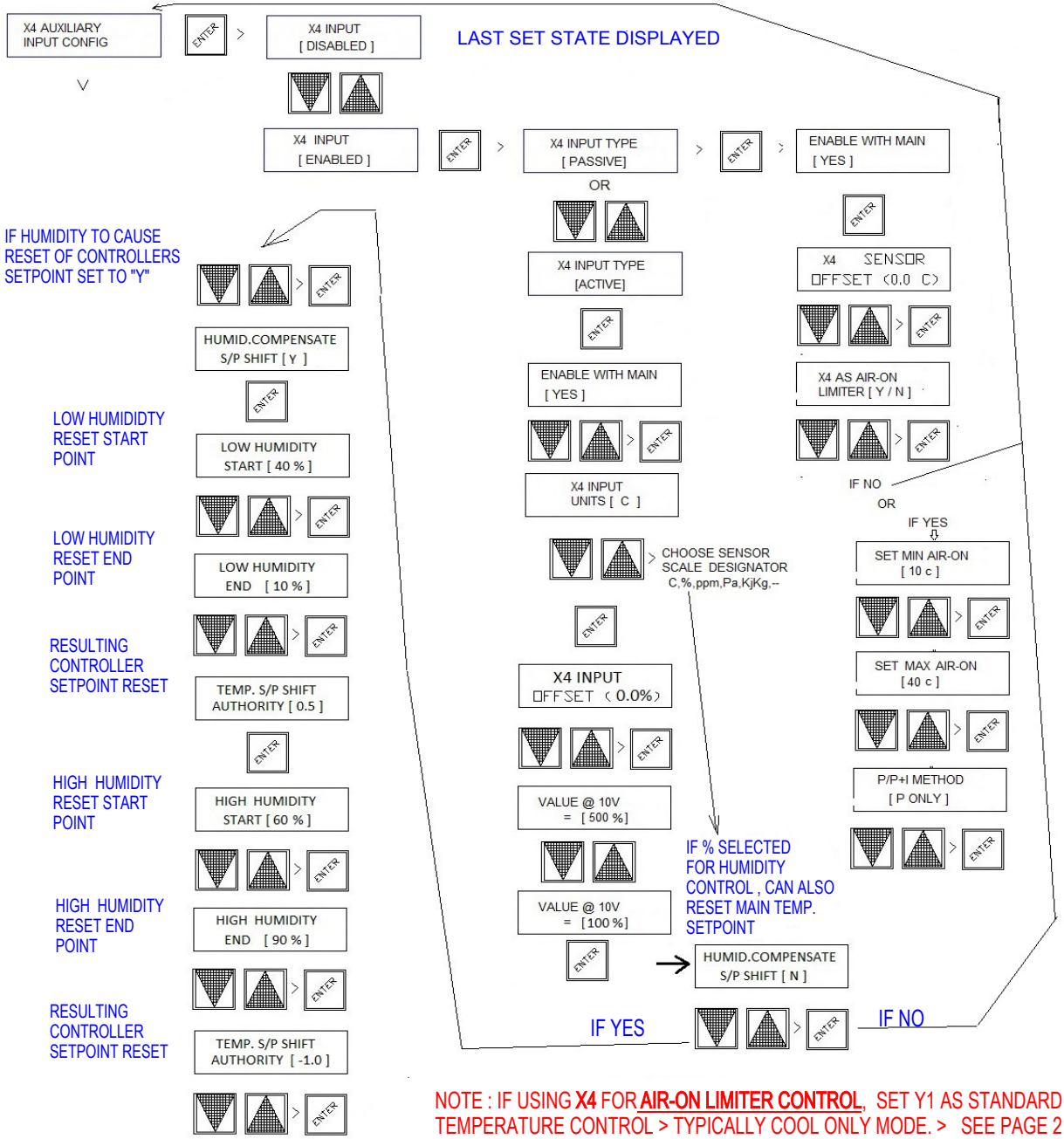

NOTE : IF USING **X4** FOR **AIR-ON LIMITER CONTROL**, SET Y1 AS STANDARD TEMPERATURE CONTROL > TYPICALLY COOL ONLY MODE. > SEE PAGE 21

OUTDOOR TEMPERATURE & ROOM or O/A HUMIDITY AUTOMATIC CONTROLLER TEMPERATURE SETPOINT SHIFT.

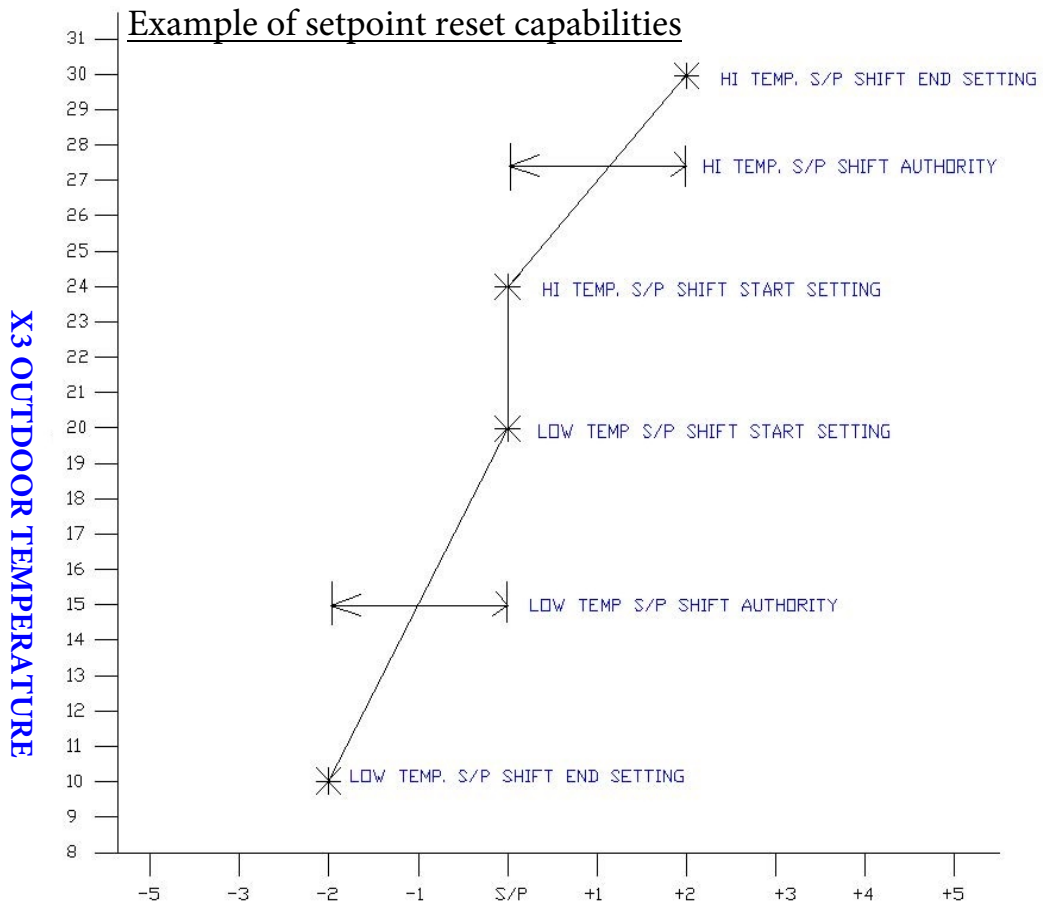

X3 O/A TEMP TO CONTROLLER TEMP. SETPOINT SHIFT

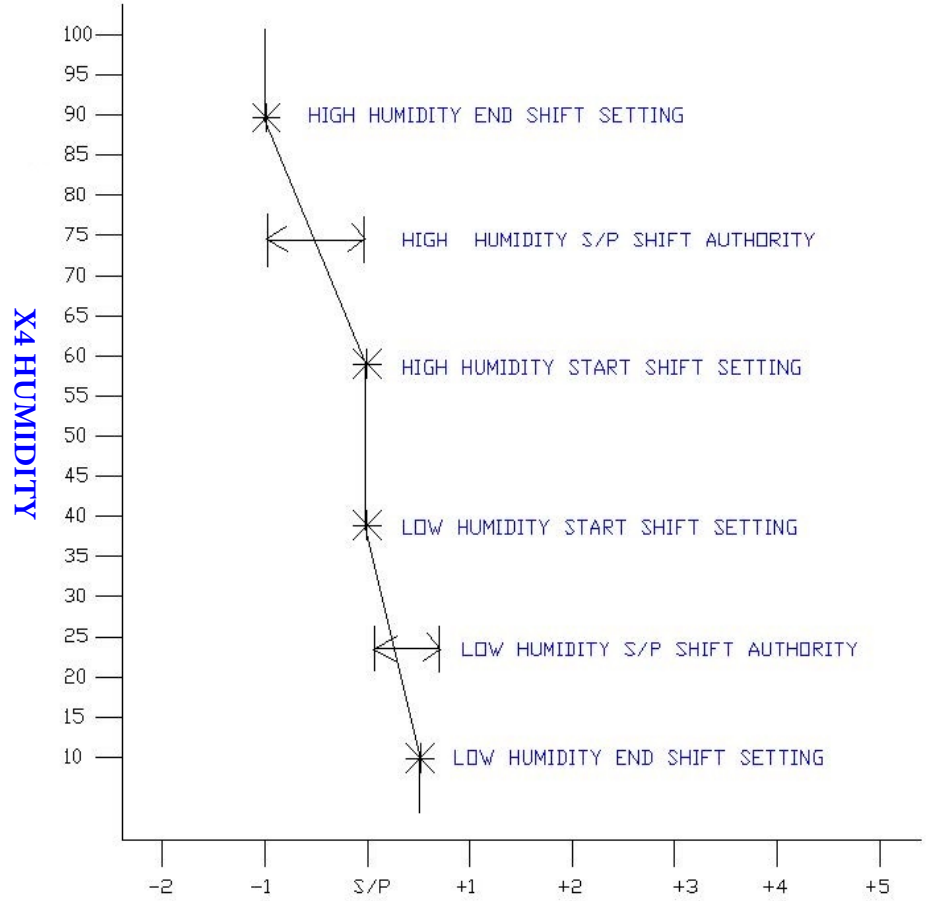

X4 HUMIDITY TO CONTROLLER TEMP. SETPOINT SHIFT

X7 CO2 ECONOMY CYCLE OVERRIDE SETTINGS

Enable this Input if a CO2 sensor is connected to the controller for air quantity control to reduce CO2 build up, by either overriding the economy cycle damper operation connected to analogue output terminal Y1 (to increase fresh air intake) **or / &** to control an internal relay set for on/off CO2 control. Typical settings (factory default if enabled) are to proportionally modulate open the economy cycle damper set to the fresh air mode as CO2 levels exceeds 700 ppm and cause full fresh air mode if levels reach 1000 ppm, or with this latest update can now alternatively just operate a relay for on/off CO2 control ..ie for energising a fresh air fan.

To edit settings, press the fascia button labeled "**ENTER**" to have the LCD display jump to the 1st menu item in the menu tree "SET CLOCK", using the DOWN arrow button scroll down the menu until "X7 CO2 SENSOR CONFIGURATION" is displayed. To then enable this feature, Press the "**ENTER**" button followed by the "**DOWN**" arrow button to change the "DISABLED" setting to 'ENABLED". Either except the default settings of (Y1 damper output) start at 700 and range over 300 ppm or edit the values with the "**UP**" or "**DOWN**" buttons, press "**ENTER**" to confirm settings. Note so as not to lose temperature control in extreme outside air temperatures, O/A temperature limits can be set to inhibit full fresh mode due to high CO2 levels when the outside air temperature is either to hot or too cold (adjustable). In this menu set the high and low outside air temperatures where fresh air mode output signal (due to CO2 control) should be restricted (factory settings are: below 10c and above 35c), the now restricted CO2 generated Y1 output signal is adjustable from 0 to 100% (factory setting is 50%). This CO2 input can also control spare internal relay/s for on/off CO2 interlocks (ie Hi/Low fan speed)..see relay programming.

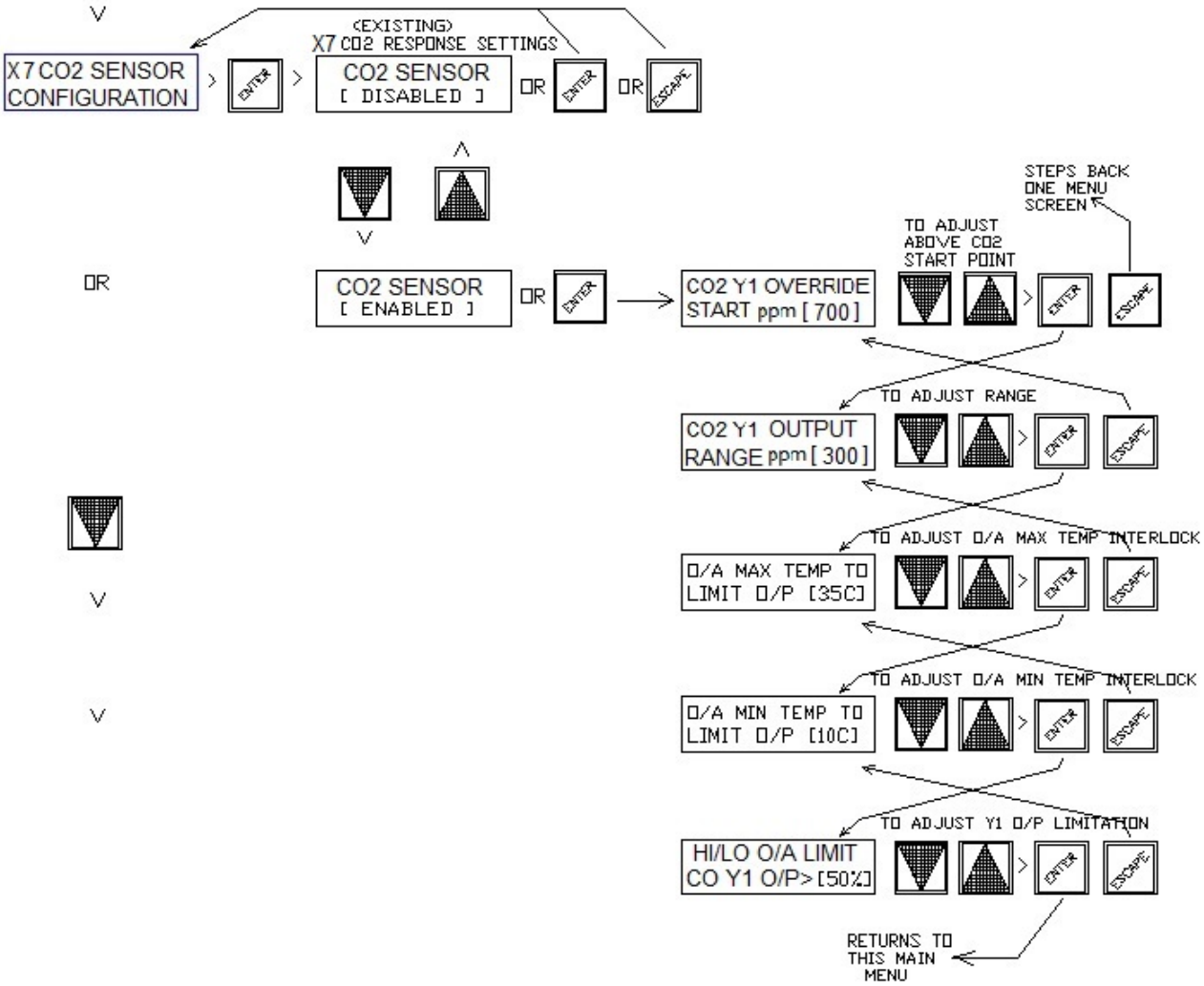

Modbus *connections X5 (A) & X6 (B) are factory hardware enabled by default using the bottom circuit board input pins CN3-1&2. Note If X7 isn't used for CO2 measurement, X7 can be set as ground source as a modbus shield connection by setting input pin CN4 to the "C" position, otherwise the shield wire needs to be connected to a good earth. Ex factory, Modbus software settings are disabled , once enabled default address = 1 & Baud rate set to 38400. Address range is Selectable from 1 to 247 & Baud rate selectable as 2400, 9600, 19200, 38400, 57600 & 115200.*

MODBUS MEMORY MAP

	Modbus Address	Offset	Access	Description	Units	Type	Explanation	Default	Error	InternalUse	InternalUse
1	Hevac Temperature Controller										
3	Read Coils									Semaphore/Op Address	Byte Address
4	00161	160	ReadOnly	Running	-	boolean	TRUE if the unit is running, FALSE if not	-	-	00160	20.0
5	00162	161	ReadOnly	Outdoor Temp Sensor Present	-	boolean	TRUE if the outdoor temperature sensor is fitted, FALSE if not	-	-	00161	20.1
6	00163	162	ReadOnly	CO2 Sensor Present	-	boolean	TRUE if the CO2 sensor is fitted, FALSE if not	-	-	00162	20.2
7	00164	163	ReadOnly	Night Purge Active	-	boolean	TRUE if Night Purge is active	-	-	00163	20.3
8	00165	164	ReadOnly	Off by external switch	-	boolean	TRUE if external switch is active	-	-	00164	20.4
9	00166	165	ReadOnly	X4 USED	-	boolean	TRUE if the X4 is in use	-	-	00165	20.5
10	00167	166	ReadOnly	Holiday Mode	-	boolean	TRUE if the unit's time switch has a holiday active (whether it is on or not)	-	-	00166	20.6
11	00168	167	ReadOnly	Sensor Error	-	boolean	TRUE if a sensor error is affecting the outputs	-	-	00167	20.7
12	Inputs										
13	10001	0	ReadOnly	REMOTE OFF or Timer Trigger 0 (D1)	-	boolean	TRUE if input is on, FALSE otherwise	-	-		
14	10002	1	ReadOnly	REMOTE ON 1 (D2)	-	boolean	TRUE if input is on, FALSE otherwise	-	-		
15	10003	2	ReadOnly	A/C FAULT INPUT STATUS 2 (D3)	-	boolean	TRUE if input is on, FALSE otherwise	-	-		
16	10004	3	ReadOnly	AUX. DIGITAL INPUT STATUS 3 (D4)	-	boolean	TRUE if input is on, FALSE otherwise	-	-		
17	Write Coils									Semaphore Address	Byte Address
18	00169	168	ReadWrite	MODBUS Master Write Request	-	boolean	TRUE if a master is connected, **only required if MB Master is writing**. Sampled every 60 seconds. MODBUS Write Regs will be cleared if not set and the controller will return to local values.	-	-	00168	21.0
19	01001	1000	ReadWrite	Relay 1	-	boolean	TRUE if relay is active	-	-	00000	n/a
20	01002	1001	ReadWrite	Relay 2	-	boolean	TRUE if relay is active	-	-	00001	n/a
21	01003	1002	ReadWrite	Relay 3	-	boolean	TRUE if relay is active	-	-	00002	n/a
22	01004	1003	ReadWrite	Relay 4	-	boolean	TRUE if relay is active	-	-	00003	n/a
23	01005	1004	ReadWrite	Relay 5 (Fan)	-	boolean	TRUE if relay is active		-	00004	n/a
24	01006	1005	ReadWrite	LED 1		boolean	TRUE if LED is active		-	00005	n/a
25	01007	1006	ReadWrite	LED 2		boolean	TRUE if LED is active		-	00006	n/a
26	01008	1007	ReadWrite	LED 3		boolean	TRUE if LED is active		-	00007	n/a
27	01009	1008	ReadWrite	LED 4		boolean	TRUE if LED is active		-	00008	n/a
28	01010	1009	ReadWrite	LED 5		boolean	TRUE if LED is active		-	00009	n/a
29	Read Registers										Byte Address
30	45001	5000	ReadOnly	Controller model	-	unsigned 16bit	Controller model number	9	-		
31	45002	5001	ReadOnly	MODBUS mapping version	-	unsigned 16bit	MODBUS memory/coil map	8	-		
32											
33	41172	01171	ReadOnly	Relay 1 Mode	Byte	unsigned 8bit	1=Cool, 2=Heat, 3=Heat&Cool, 4 (132)=CO2, 5 (133)=Time Switch 2, 6 (134) = X4 Rising, 7 (135) = X4 Falling, 8 (136) = Y1 Rising, 9 (137) = Y1 Falling, 10 (138) = Y2 Rising, 11 (139) = Y2 Falling,	0			171
34	41173	01172	ReadOnly	Relay 2 Mode	Byte	unsigned 8bit		0			172
35	41174	01173	ReadOnly	Relay 3 Mode	Byte	unsigned 8bit		0			173
36	41175	01174	ReadOnly	Relay 4 Mode	Byte	unsigned 8bit	Bit 7 (80 hex or 128 decimal) will be set TRUE if the mode is above 3, so add 128 to each value over 3.	0			174
37											
38	41218	1217	ReadOnly	Run Mode	Byte	unsigned 8bit	Configured run mode: 0=Manual, 1=Timer (AHR), 2=TimeSwitch, 3=Timeswitch ONLY, 4=X4 Only	0			217
39	41219	01218	ReadOnly	Run Timer	Byte	unsigned 8bit	Run timer, in 10min steps, max 24hr = 24 * 6 = 144 (10min)	0			218
40	41220	01219	ReadOnly	**X1** Thermistor Offset	Byte	unsigned 8bit	user adjustable offset for thermistor, Therm = Thermistor + (PMbThermOffset - 128) * 0.1 (so it's +/- 12.7° max)	0			219
41	41221	01220	ReadOnly	CO2 OUTPUT RESPONSE START	Byte	unsigned 8bit	range 1 thru 200, representing 10 - 2000ppm, PPM = PMbCO2Start * 10.0	0			220
42	41222	01221	ReadOnly	CO2 OUTPUT RESPONSE RANGE	Byte	unsigned 8bit	range 50 - 150, representing 500 - 1500ppm, PPM = PMbCO2Range * 10.0	0			221
43	41223	01222	ReadOnly	CO2 Max TEMP INTERLOCK	Byte	unsigned 8bit	range 0 - 50 (°C)	0			222
44	41224	01223	ReadOnly	CO2 Min TEMP. INTERLOCK	Byte	unsigned 8bit	range 0 - 50 (°C)	0			223
45	41225	01224	ReadOnly	CO2 Y1 MAXIMUM OUTPUT	Byte	unsigned 8bit	range 0 - 100 (%)	0			224
46	41226	01225	ReadOnly	O/A Low temp. Y1 lockout	Byte	unsigned 8bit	range 50 - 200, representing 5.0 to 20.0°C	0			225
47	41227	01226	ReadOnly	O/A (X3) better for use then X1	Byte	unsigned 8bit	range 3 - 50, representing 0.3 to 5.0°C	0			226
48	41228	01227	ReadOnly	Modbus Slave Address	Byte	unsigned 8bit	modbus slave address, 1-247, 0=disabled	0			227
49	41229	01228	ReadOnly	Modbus Baud	Byte	unsigned 8bit	baud rate ref MBpBaud, 0=1200, 1=2400, 2=9600, 3=19200, 4=38400, 5=57600, 6=115200	0			228
50	41230	01229	ReadOnly	10V Input	Byte	unsigned 8bit	TRUE if an analogue input is 0-10V	0			229
51	41231	01230	ReadOnly	X1TEMPERATURE INPUT @ 10V	Byte	unsigned 8bit	X1 active sensor temperature at 10V (full scale)	0			230
52	41232	01231	ReadOnly	X2 ACTIVE REMOTE SETPOINT @ 10V	Byte	unsigned 8bit	X2 active remote setpoint at 10V (full scale)	0			231
53	41233	01232	ReadOnly	X2 Thermistor Offset	Byte	unsigned 8bit	user adjustable offset for thermistor, Therm = Thermistor + (PMbThermOffset - 128) * 0.1 (so it's +/- 12.7° max)	0			232
54	41234	01233	ReadOnly	keyboard Lock Level	Byte	unsigned 8bit	UI Lock level	0			233
55	41235	01234	ReadOnly	X4 Input @ 10V	Byte	unsigned 8bit	X4 active input value at 10V (full scale). Coded as /5 up to 100, then /10 from there up. 1=5, 100=500, 101=510	0			234
56	41236	01235	ReadOnly	X4 Input Offset	Byte	unsigned 8bit	user adjustable offset for input, Value = Input + (PMbThermOffset - 128) * 0.1 (so it's +/- 12.7° max) in temp mode	0			235
57	41237	01236	ReadOnly	X3 O/A SENSOR @ 10V	Byte	unsigned 8bit	X3 active sensor temperature at 10V (full scale)	0			236
58	41238	01237	ReadOnly	X3 Thermistor Offset	Byte	unsigned 8bit	user adjustable offset for thermistor, Therm = Thermistor + (PMbThermOffset - 128) * 0.1 (so it's +/- 12.7° max)	0			237
59	41239	01238	ReadOnly	Y1 Min	Byte	unsigned 8bit	Minimum value for Y1 (1% steps)	0			238
60	41240	01239	ReadOnly	Y2 Min	Byte	unsigned 8bit	Minimum value for Y2 (1% steps)	0			239
61	41241	01240	ReadOnly	Y1 Max	Byte	unsigned 8bit	Maximum value for Y1 (1% steps)	0			240
62	41242	01241	ReadOnly	Y2 Max	Byte	unsigned 8bit	Maximum value for Y2 (1% steps)	0			241
63	41243	01242	ReadOnly	X4 Units	Byte	unsigned 8bit	Units used for X4 display: 0=°C, 1=%, 2=ppm, 3=V, 4=Pa, 5=None	0			242
64	41024	01023	ReadOnly	Target temperature soure	Byte	unsigned 8bit	Source of current target temperature	0			23
65											
66	43014	3013	ReadOnly	Endeavour Setpoint	celcius * 10	signed 16bit	Setpoint temperature. To display in celsius, divide by 10 and display with one decimal place.	-	-		26 - 27
67	43015	3014	ReadOnly	X1 Indoor temperature	celcius * 10	signed 16bit	Indoor temperature. To display in celsius, divide by 10 and display with one decimal place.	-	9999		28 - 29
68	43016	3015	ReadOnly	X3 Outdoor temperature	celcius * 10	signed 16bit	Outdoor temperature. To display in celsius, divide by 10 and display with one decimal place.	-	9999		30 - 31
69	43017	3016	ReadOnly	X7 CO2 LEVEL	ppm	signed 16bit	CO2 level in ppm.	-	-		32 - 33
70	43018	3017	ReadOnly	Output Y1	percent * 10	signed 16bit	Percent drive level, eg 513 = 51.3%	-	-		34 - 35
71	43019	3018	ReadOnly	Output Y2	percent * 10	signed 16bit	Percent drive level, eg 513 = 51.3%	-	-		36 - 37
72	43020	3019	ReadOnly	X4 INPUT	value * 10	signed 16bit	AUXILIARY X4 INPUT VALUE	-	9999		38 - 39
73	41041	01040	ReadOnly	Current running state	Byte	unsigned 8bit	Actual operating state of the device: 1: Manual Off 2: Idle (Auto Off) 3: Cooling 4: Heating 5: Fault 6: Fan (Recycle) 7: Econ (Fresh Air) 8: Vent (Night Purge) 9: On 10: CO2 11: Timeswitch 2 12: X4 13: Off due to Sensor Fault 14: Off due to External Fault Input	0			40
74	Write Registers										Byte Address
75	41023	1022	ReadWrite	Operating mode	-	unsigned 8bit	Operating mode: 0 = auto, 1 = force on, 2 = force off	0	-		22
76	43013	3012	ReadWrite	MODBUS setpoint	celcius * 10	unsigned 16bit	MODBUS controller setpoint, temperature = MODBUSSetpoint/10. 0 means use local setpoint	0	-		24 - 25

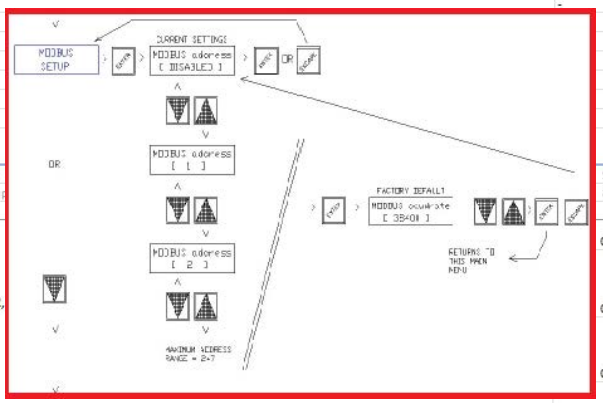

TIPS & TRICKS

1.) Sometimes its desirable to have an electrically independent system RUNNING output same as the endeavours relay 5 (time switch /fan output) to drive a **System Run Lamp** or energise some auxiliary device when the A/C system is on (ie fan coil unit run interlock to open/close fresh air damper). A trick to achieve this is to program relay 1 for "BOTH" (heat & cool mode), set the deadband setting to zero, the switching differential to 5.0 & the time delay to zero. This will have the affect of overloading the temperature On logic for this relay > locking this relay on when the system is in running operation (ie time switch on). Use relay 1's terminals 1,2 & 3 as required for this electrically independent output.

2.) A dedicated **AHR (only) ON Lamp** output (after hours or run timer on) can be achieved using a spare relay set to AHR mode

3.) A fixed **DC output voltage as an on/off output** can be set using a spare Y output (as an example a fixed speed setting to an EC fan). In programming set the chosen Y's output min & max settings to a desired fixed value to produce a fixed output, however this output will still drop to zero when the system is off. This Y output can also be interlocked with a spare relay reacting to an analogue inputs X1 or X4 as an on/off fixed dc output due to the analogue input valve.

4.) For applications requiring **two different setpoints** a remote switch or using the controllers 2nd time switch could be used to switch in a fixed dc voltage from a spare Y output into terminal X2. When the feed into X2 is disconnected the controller will use its setpoint as set using the controllers up/down buttons, when the feed to X2 is made the controller will use this input as the setpoint value i.e 0-10v = 0-50c.

5.) **Virtual Actuator Auxiliary switch** relative to one of the controllers Y outputs can be set using a spare relay (typically R1) that can be set to react to the output voltage of a Y output or alternatively for motors with a feedback output this output could be connected to X4 to control a spare relay ie to switch a fan on when a damper is 90% open.

FORCED RESET TO EX FACTORY DEFAULTS

PRESET PROGRAM # 0

SEE PAGE 34 FOR EX HEVAC PROGRAMMED SETTINGS

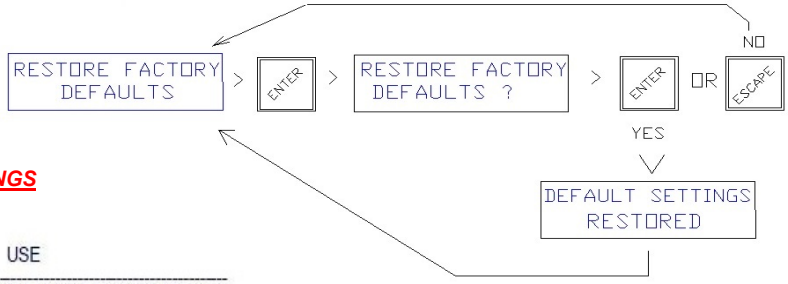

RELAY	MODE	DB	SD	PB	I	TD	USE
R1	B	3.0	1.0			0.1	HEAT & COOL STAGE 3 (COMP.3)
R2	B	2.0	0.7			0.1	HEAT & COOL STAGE 2 (COMP.2)
R3	B	1.0	0.3			0.1	HEAT & COOL STAGE 1 (COMP.1)
R4	H	0.5	0.4			0.1	REVERSING VALVE HEAT MODE
R5							FIXED AS SYSTEM ON RELAY (FAN)
Y1	C	0.1		1.0	P Only		ECONOMY CYCLE DAMPER O/P
Y2	B	1.0		1.0	P Only		MODULATING COMPRESSOR O/P

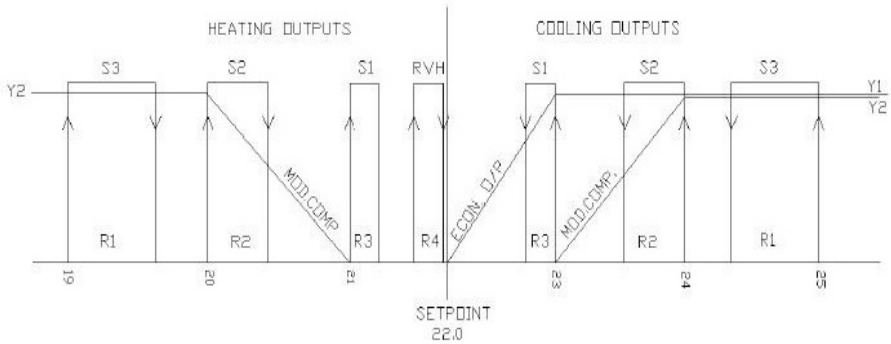

CONTROLLER SET AS STANDARD (TEMP.) MODE CONTROLLER
" START BY " SET TO TIME SWITCH (1)
RELAYS SET FOR TRIPLE COMPRESOR/REVERSE CYCLE.
AHR TIMER SET FOR 2 HOURS
Y1 SET FOR COOL ONLY (ECONOMY CYCLE)
Y2 SET FOR HEAT+COOL (MODULATING COMPRESSOR)
X3 (O/A), X4 (AUX.) & X7 (CO2) DISABLED
X1, 2, 3 & 4 SET AS PASSIVE RESISTANCE INPUTS
X5 & 6 (MODBUS) SOFTWARE DISABLED
TIME SWITCH 2 DISABLED
HOLIDAY DATES EMPTY
DAY LIGHT SAVINGS AUTO TIME CORRECTION ENABLED.
RELAY 5 (FAN CONTROL) SET TO ON (NOT CYCLE)
NIGHT PURGE MODE DISABLED
Y1 SET AS COOL & Y2 AS BOTH, & SET FOR FULL 0-10v

EXAMPLE INPUT / OUTPUT Connections

HEVAC SENSORS (OTHER VARIANTS ALSO AVAILABLE ie AVERAGING)

PASSIVE RESISTANCE SENSORS

SRT3-D	(MODERN) ROOM TEMPERATURE SENSOR	2 WIRE
SRT-DSW	ROOM TEMP. SENSOR c/w ON/OFF/AHR SWITCH	2 WIRE
SRT-DSP	ROOM TEMP. SENSOR c/w SETPOINT	3 WIRE
SRT-DSPSW	ROOM TEMP. SENSOR c/w SWITCH & SETPOINT	3 WIRE
SDT-D	DUCT TEMPERATURE SENSOR	2 WIRE
SOT-D	OUTSIDE TEMPERATURE SENSOR	2 WIRE

ACTIVE 0-10vDC SENSORS

OSAO	ACTIVE OUTSIDE TEMP. SENSOR	3 WIRE
HSMO	ROOM TEMP.& HUMIDITY	4 WIRE
HSMO-Q	ROOM TEMP.,HUMIDITY & CO2	4 WIRE
HSMO-DAT	ROOM TEMP.,S/P & AHR SW.c/w DISPLAY	4 WIRE
HSMO-DQ	ROOM TEMP.,HUMIDITY, CO2 c/w DISPLAY	4 WIRE
HSMO-DAQT	ROOM TEMP.,HUMID., CO2, S/P,AHR & S/P	7 WIRE

CONTROLLER SENSOR INPUTS

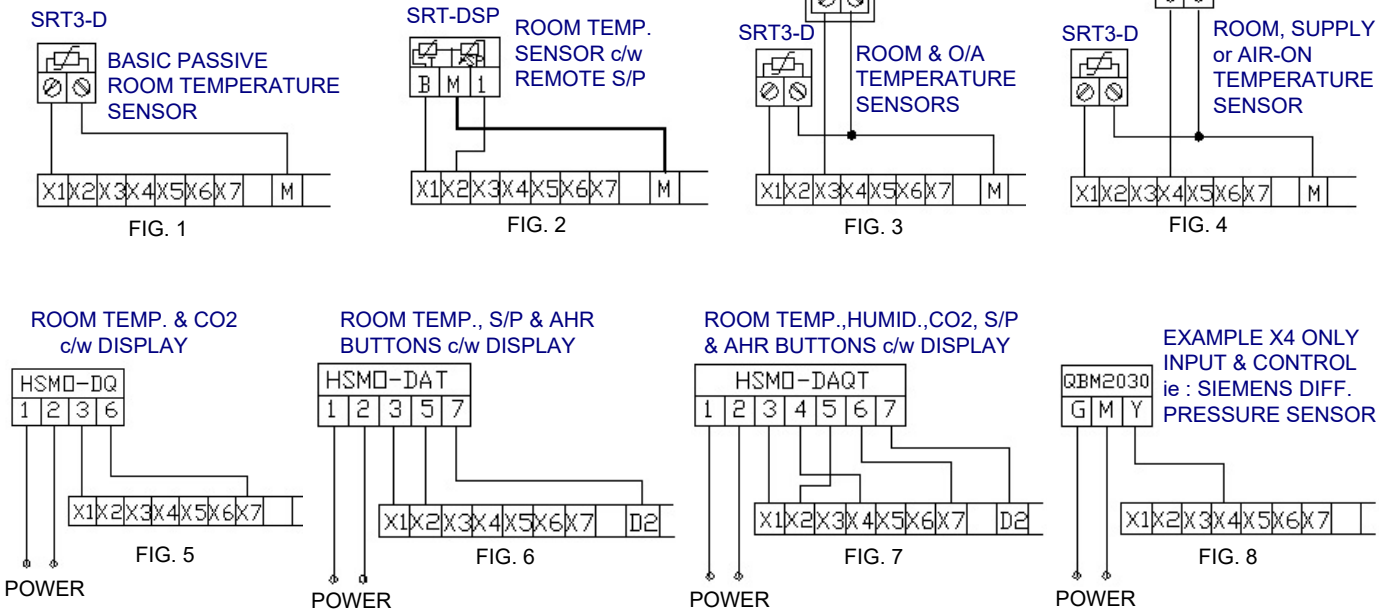

CONTROLLER RELAY OUTPUTS

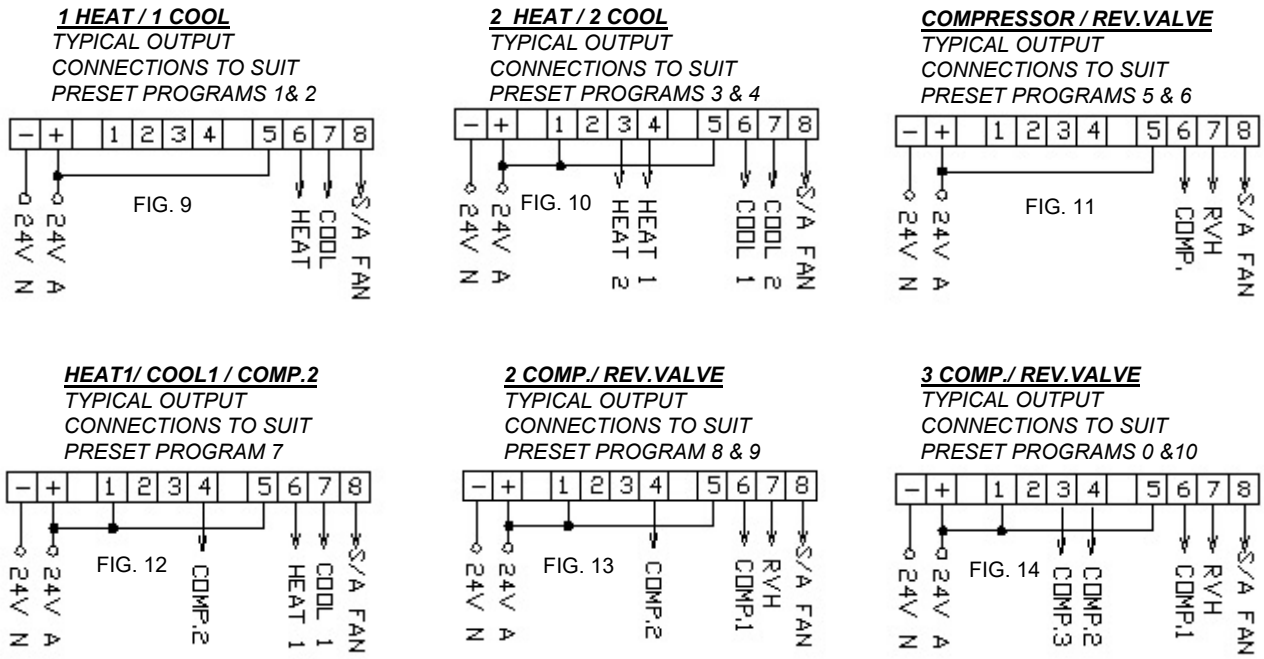

GUIDE & SUGGESTED OPTIONAL INPUT USE FOR MANUAL STOP / START EXTERNAL OVERRIDE

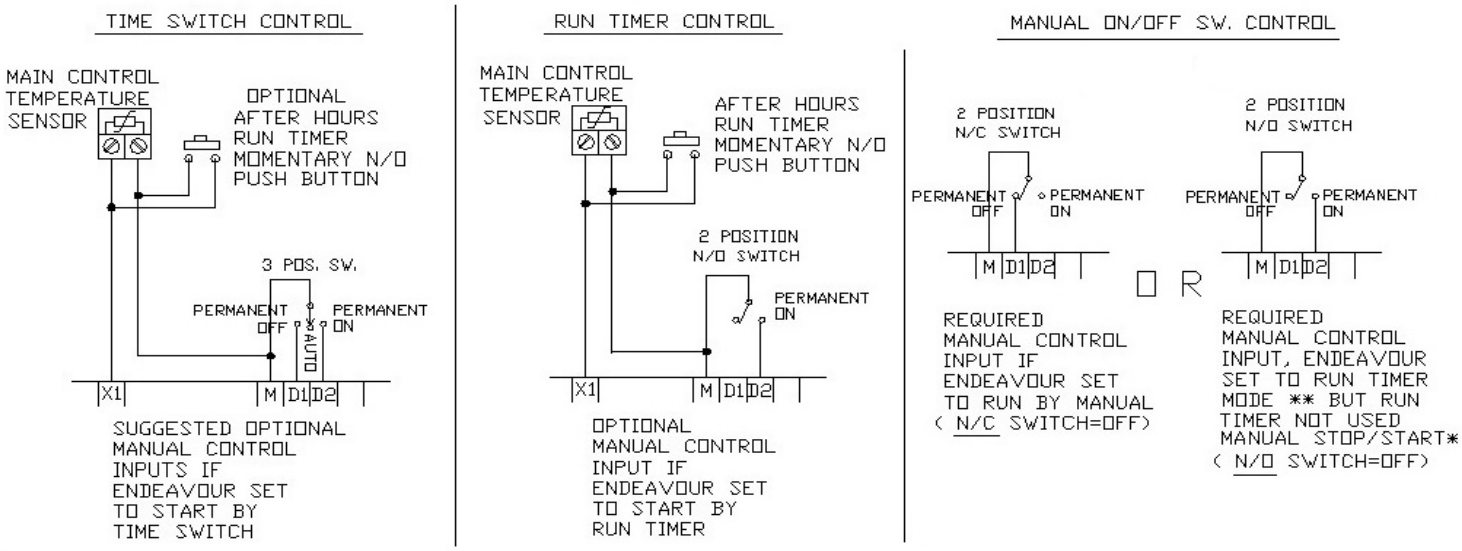

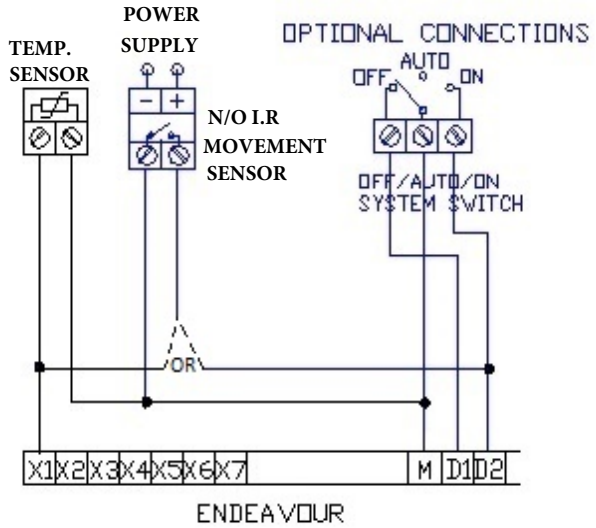

RUN OPERATION TRIGGERED BY MOVEMENT SENSOR

SET ENDEAVOUR TO "START BY" RUN TIMER & SET TIMER MODE TO "RESTART" NOT "TOGGLE" MODE. CONNECT MOVEMENT SENSOR OUTPUT TO X1 FOR PASSIVE OR D2 FOR ACTIVE MAIN SENSORS

CONTROL OPTIONS USING AN ACTIVE MAIN SENSORS

HSMO SERIES MULTI-OUTPUT ROOM TEMPERATURE / HUMIDITY SENSORS. VERSIONS WITH OPTIONAL LCD SCREEN, CO2, SETPOINT & AHR PUSH BUTTONS

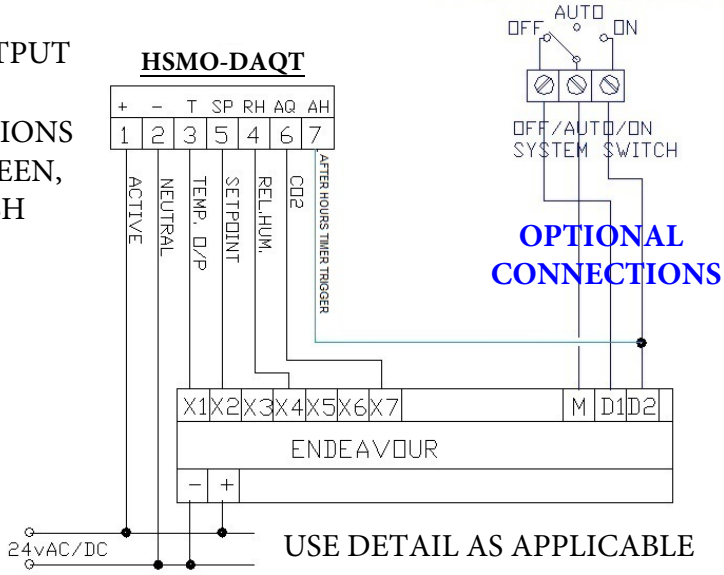

USE DETAIL AS APPLICABLE

TYPICAL CONTROLLER CONECTIONS

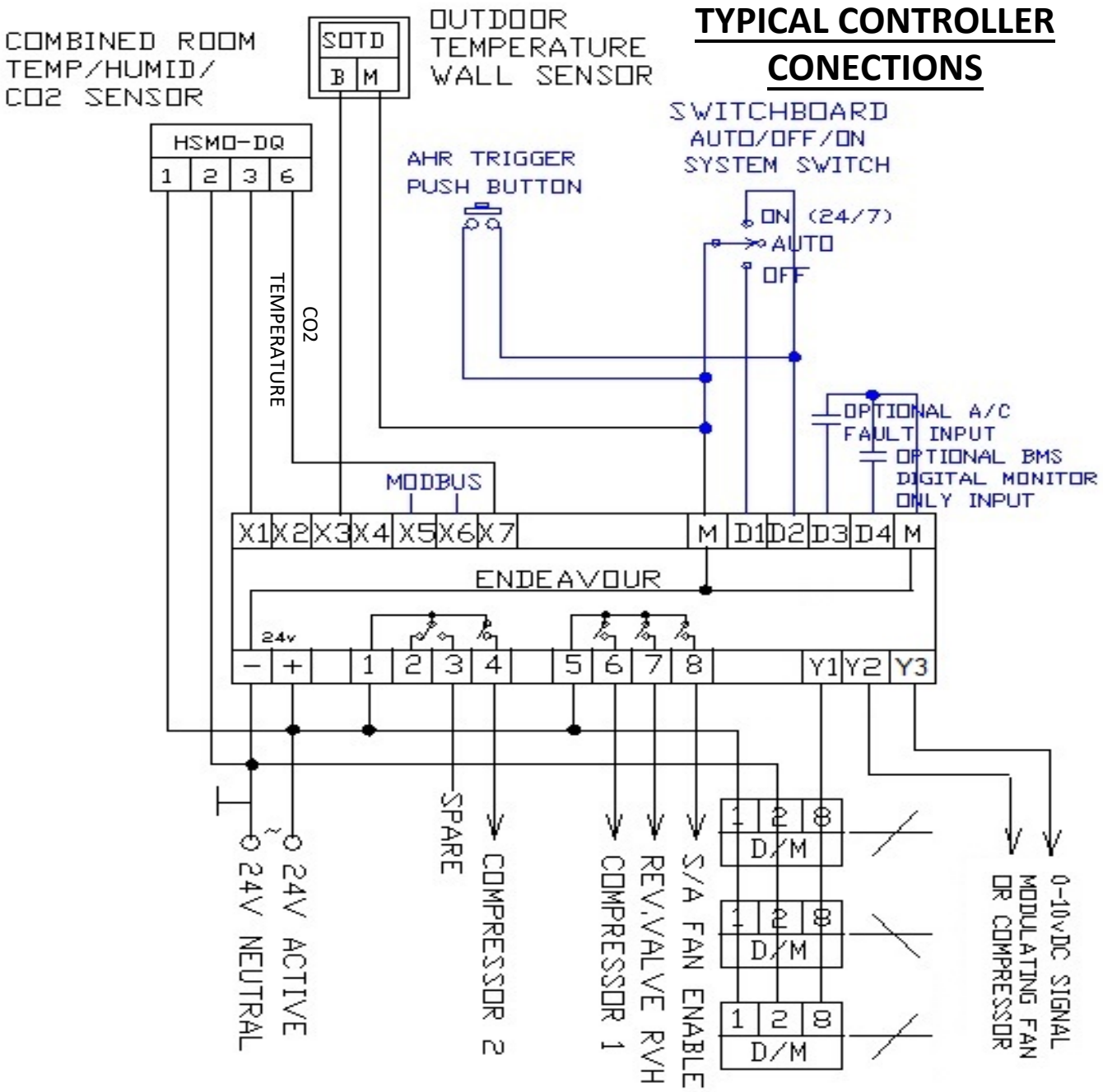

SCRATCH PAD FOR CONTROLLER WIRING PER PROJECT

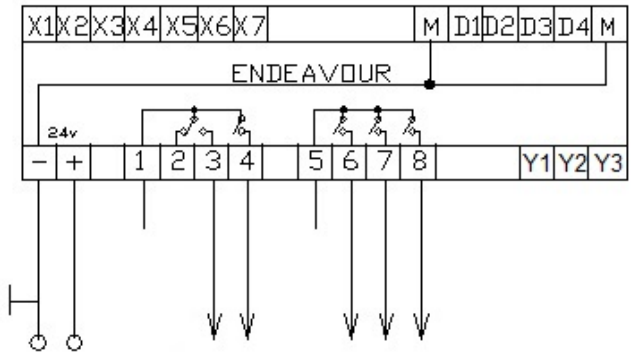

EX HEVAC (Preset #8) ENDEAVOUR SITE PROGRAM INFORMATION

CONTROLLER SET TO "**RUN BY**" : TIME SWITCH

DAYLIGHT SAVING = ENABLED or DISABLED

RUN TIMER SETTING = 2 HOURS

SETPOINT = 22c

TIME SWITCH 1		M	T	W	T	F	S	S	YES(Y) or NO(-)
	EVENT 01, DAYS :	Y	Y	Y	Y	Y	-	-	TIME: 8 :0 0 ,ACTION: ON
"	EVENT 02 " :	Y	Y	Y	Y	Y	-	-	TIME: 1 7 : 3 0 , ACTION: OFF
"	EVENT 03 " :								TIME:____:____, ACTION: ON OFF
"	EVENT 04 " :								TIME:____:____, ACTION: ON OFF
"	EVENT 05 " :								TIME:____:____, ACTION: ON OFF
"	EVENT 06 " :								TIME:____:____, ACTION: ON OFF
"	EVENT 07 " :								TIME:____:____, ACTION: ON OFF
"	EVENT 08 " :								TIME:____:____, ACTION: ON OFF

TIME SWITCH 2 TIME SWITCH 2 NOT USED **HOLIDAYS** NO HOLIDAYS LOADED

RELAY 1 – 4 RELAY ASSIGNMENTS

RELAY	MODE	DEADBAND(DB)	SWITCH. DIFF.(SD)	TIME DELAY (Tdly)	NOTES
1	BOTH				NOT USED
2	BOTH	2.0	0.5	2:00	COMPRESSOR 2
3	BOTH	1.0	0.3	1:00	COMPRESSOR 1
4	HEAT	0.5	0.4	0:10s	rev. valve HEAT

5 = FAN CONTROL METHOD: ON or CYCLE (runs continuosly during time switch on period.

ANALOGUE Y1, Y2& Y3 OUTPUT SETTINGS

Y O/P	MODE	DEADBAND	P.BAND	I-TIME	MIN.	MAX.	NOTES
Y1	DISABLED						
Y2	DISABLED						
Y3	DISABLED						

X I/P	PURPOSE	Active/Passive	OFFSET	10v=	PCB JUMPER POS.	NOTES
X1	MAIN TEMP. SENSOR	PASSIVE	0	n/a	T	Main Temp Sensor
X2	REMOTE SETPOINT	PASSIVE	0	n/a	T	Optional remote S/P
X3	OUTSIDE AIR TEMP.SENSOR	PASSIVE	DISABLED		T	Otional O/A sensor
X4	AUXILIARY INPUT	PASSIVE	DISABLED		T	Optional analog input
X5	MODBUS "A" COMMUNICATION TERMINAL		DISABLED		C	
X6	MODBUS "B" COMMUNICATION TERMINAL				C	
X7	CO2 SENSOR		DISABLED		V	Optional CO2 sensor

OTHER SETTINGS

MODBUS = software DISABLED **NIGHT PURGE=** DISABLED

MAIN CONTROLLER FUNCTION = STANDARD TEMP. APP **S/P RESET =** DISABLED

ENDEAVOUR SITE PROGRAM INFORMATION

(PLEASE RECORD SETTINGS IF CONTROLLER CHANGED FROM FACTORY DEFAULTS & LEAVE ONSITE.)

CONTROLLER SET TO "**START BY**" : _____

DAYLIGHT SAVING = ENABLED or DISABLED

RUN TIMER SETTING _____ **SETPOINT =** _____

			M	T	W	T	F	S	S	YES(Y) or NO(-)	
TIME SWITCH 1	EVENT 01,	DAYS :								TIME:_____:_____,	ACTION: ON OFF
"	EVENT 02	" :								TIME:_____:_____,	ACTION: ON OFF
"	EVENT 03	" :								TIME:_____:_____,	ACTION: ON OFF
"	EVENT 04	" :								TIME:_____:_____,	ACTION: ON OFF
"	EVENT 05	" :								TIME:_____:_____,	ACTION: ON OFF
"	EVENT 06	" :								TIME:_____:_____,	ACTION: ON OFF
"	EVENT 07	" :								TIME:_____:_____,	ACTION: ON OFF
"	EVENT 08	" :								TIME:_____:_____,	ACTION: ON OFF

										NOTE ACTION FIXED
TIME SWITCH 2	EVENT 01,	DAYS :								TIME:_____:_____,	ACTION: ON
"	EVENT 02	" :								TIME:_____:_____,	ACTION: OFF
"	EVENT 03	" :								TIME:_____:_____,	ACTION: ON
"	EVENT 04	" :								TIME:_____:_____,	ACTION: OFF

					DELETE AFTER EXECUTION Y/N
HOLIDAY 1, "	"	START DATE: /	,FINISH DATE: /		,D.A.E : Y / N
" 2 "	"	: /	: /		:
" 3 "	"	: /	: /		:
" 4 "	"	: /	: /		:
" 5 "	"	: /	: /		:
" 6 "	"	: /	: /		:
" 7 "	"	: /	: /		:
" 8 "	"	: /	: /		:
" 9 "	"	: /	: /		:
" 10 "	"	: /	: /		:
" 11 "	"	: /	: /		:
" 12 "	"	: /	: /		:
" 13 "	"	: /	: /		:
" 14 "	"	: /	: /		:

RELAY 1 – 4 RELAY ASSIGNMENTS

RELAY	MODE	DEADBAND(DB)	SWITCH. DIFF.(SD)	TIME DELAY (Tdly)	NOTES
1					
2					
3					
4					

RELAY 5 FAN CONTROL METHOD: **ON** or **CYCLE**

Y1,Y2 & Y3 ANALOGUE OUTPUT ASSIGNMENTS

ANALOG O/P	MODE	DEADBAND(DB)	PROP.BAND (PB)	INTEGRAL TIME	MIN O/P	MAX O/P	NOTES
Y1							
Y2							
Y3							

"X" ANALOGUE INPUT CONFIGURATIONS

X I/P	PURPOSE	V / I/Passive	OFFSET	10v=	PCB JUMPER POS.	NOTES
X1	MAIN TEMP. SENSOR					
X2	REMOTE SETPOINT					
X3	O/A TEMP.SENSOR					
	O/A INDUCED S/P RESET :					
X4	AUXILIARY INPUT					
	HUMIDITY INDUCED S/P RESET :					
X5	MODBUS "A" COMMUNICATION TERMINAL				C	
X6	MODBUS "B" COMMUNICATION TERMINAL				C	
X7	CO2 SENSOR				V	

OTHER SETTINGS

M, T, W, T, F, S, S

NIGHT PURGE= ENABLED/DISABLED, DAYS: | | | | | | | |, START TIME= : , END TIME= :

ON DIFF = , OFF DIFF = , ON DELAY =

MODBUS = DISABLED / ADDRESS= , BAUDRATE =

MAIN CONTROLLER FUNCTION = STANDARD TEMP. / TIME SWITCH ONLY / X4 ONLY